Technical manual

Status 01.08.2022

Industrial sectional doors

Series 60
Depth 67 mm

HÖRMANN

Contents

Contents

Notice:
All information in this document can only represent the status upon document creation.
Therefore deviations from the product configurator may occur.
All dimensions in mm.
Subject to design changes.

Detailed door leaf constructions and track applications as well as fitting examples are provided in this manual.

Product descriptions

Door type	Door leaf / wicket door

Sectional door SPU 67 Thermo: double-skinned steel sectional door with thermal break, Stucco-textured / Micrograin, door sections 625 and 750 mm high	
Door leaf	Door sections made of double-skinned, PU-foamed steel sections with thermal break (made of hot-galvanized steel). Door sections Stucco-textured on inside and outside with uniform horizontal ribbing, or Micrograin with fine horizontal embossing outside and Stucco-textured inside, 625 and 750 mm high, depth 67 mm. All door sections without finger trap protection. Surface protection with polyester-primer coating.
Wicket door	Only to be installed in the centre fields of the door. **Cannot be fitted in the outer fields – note the arrangement!** Only opening outwards, LH or RH hinged. **In doors with wicket door without threshold rail, the clear frame dimensions (ordering size, LZ) must not exceed the clear opening width + 10 mm.** **Attention (for threshold rail): For grid heights 2000, 2125 and 2250, the clear opening height must not be lower than the door height.**
Glazing	Glazing frames of anodised aluminium extrusion profiles in the version with thermal breaks or alternatively sections with compound glazing are possible within the indicated fitting area. Fewer compound glazings or different arrangements are possible subject to the minimum distances. Glazing frames are possible from FFL and compound glazing from 625 / 750 mm above FFL.

Sectional door SPU 67 Thermo: double-skinned steel sectional door with thermal break, Stucco-textured / Micrograin, door sections 375 and 500 mm high	
Door leaf	Door sections made of double-skinned, PU-foamed steel sections with thermal break (made of hot-galvanized steel). Door sections Stucco-textured on inside and outside with uniform horizontal ribbing, or Micrograin with fine horizontal embossing outside and Stucco-textured inside, 375 and 500 mm high, depth 67 mm. All door sections without finger trap protection. Surface protection with polyester-primer coating.
Wicket door	Only to be installed in the centre fields of the door. **Cannot be fitted in the outer fields – note the arrangement!** Only opening outwards, LH or RH hinged. **In doors with wicket door without threshold rail, the clear frame dimensions (ordering size, LZ) must not exceed the clear opening width + 10 mm.** **Attention (for threshold rail): For grid heights 2000 and 2125, the clear opening height must not be lower than the door height.**
Glazing	Glazing frames of anodised aluminium extrusion profiles in the version with thermal breaks or alternatively sections with compound glazing are possible within the indicated fitting area. Fewer compound glazings or different arrangements are possible subject to the minimum distances. Glazing frames are possible from FFL and compound glazing from 500 mm above FFL.

Sectional door APU 67 Thermo: glazed aluminium sectional door with thermal break with steel bottom section	
Door leaf	Bottom section made of double-skinned, PU-foamed steel section with thermal break (made of hot-galvanized steel), 750 mm (standard) or 1500 mm high, Stucco-textured on inside and outside with uniform horizontal ribbing, or Micrograin with fine horizontal embossing on outside and Stucco-textured inside. Surface protection with polyester-primer coating. Other door sections with glazing made of anodised aluminium extrusion profiles with thermal break. Depth: 67 mm. All door sections without finger trap protection. Infill: Clear synthetic triple pane, 51 mm (S 3).
Wicket door	Depending on the door type, made of anodised aluminium extrusion profiles with thermal breaks, installed into the centre fields of the door. **Cannot be fitted in the outer fields – note the arrangement!** Only opening outwards, LH or RH hinged. **In doors with wicket door without threshold rail, the clear frame dimensions (ordering size, LZ) must not exceed the clear opening width + 10 mm.** **Attention (for threshold rail): If the wicket door has the same number of door sections as the sectional door, the clear opening height must not be lower than the door height (RM).**

Sectional door ALR 67 Thermo: glazed aluminium sectional door with thermal break	
Door leaf	Door sections of anodised aluminium extrusion profiles with thermal break. Depth: 67 mm. All door sections without finger trap protection. Bottom door section consisting of PU-foamed infill with 51 mm Stucco-textured aluminium sheet cover on both sides (FU), other door sections with 51 mm clear synthetic triple panes (S3).
Wicket door	Depending on the door type, made of anodised aluminium extrusion profiles with thermal breaks, installed into the centre fields of the door. **Cannot be fitted in the outer fields – note the arrangement!** Only opening outwards, LH or RH hinged. **In doors with wicket door without threshold rail, the clear frame dimensions (ordering size, LZ) must not exceed the clear opening width + 10 mm.** **Attention (for threshold rail): If the wicket door has the same number of door sections as the sectional door, the clear opening height must not be lower than the door height (RM).**

Sectional door ALR 67 Thermo Glazing: extensive glazing, aluminium sectional door with thermal break, real glass	
Door leaf	Door sections of anodised aluminium extrusion profiles with thermal break. Depth: 67 mm. All door sections without finger trap protection. All door section infills with double panes made of single-pane safety glass 26 mm. Uniform infill heights.

Frame / track application
Enclosed, moulded angle frame, made of hot-galvanized steel with screwed track and double radius 510 mm.

Product descriptions

Door lock	
Manually operated	Inside locking using a shootbolt, rotary latch (for track applications with low-mounted torsion spring shaft on request) or floor locking.
Power-driven	Inside locking using a shootbolt

Counterbalance

Torsion springs, with carrying cables on the side (with a low headroom track application, a combination of carrying chain and carrying cable). The torsion springs for N, ND, NS, NK, NA, NH, GD and GS track applications are designed for at least 25,000 closing cycles and for all other track applications for at least 50,000 closing cycles.
For version with direct drive operator via the operator, shaft and carrying cables on the side.

Safety-related equipment according to DIN EN 12604

- Manually operated doors using one torsion spring on both sides with approved catch safety device and integrated anti-lift kit *)
- Manually operated doors using more than one torsion spring with approved spring safety device and with approved catch safety device on both sides as well as integrated anti-lift kit (not for version with direct drive operator) *)
- Power-driven doors with break-in-resistant anti-lift kit

* European patent

Notice on trap guard:
To comply with the safety requirements of door product standard DIN EN 13241-1, the following door systems require an operator and a light grille HLG 550. The light grille must be fitted in the reveal to secure gaps resulting during door travel. This safeguarding must take place up to a height of 2500 mm above FFL or a different permanent access level:

Type of door :		**SPU 67 Thermo**	**APU 67 Thermo**	**ALR 67 Thermo**	**ALR 67 Thermo Glazing**
Track applications:	N, NA, ND, NS, NK	Door height ≤ 3125	Door height ≤ 3165		
	NH, GD, GS, GK	Door height ≤ 3000	Door height ≤ 3040		
	L, LD	Door height ≤ 3250	Door height ≤ 3290		
	H, HA, HD, HS, HK, VS after technical inspection	Door height ≤ 3125	Door height ≤ 3165		

Seals

Bottom seal made of 1-chamber profile internally and 3-chamber EPDM profile externally with flexible adjustment lip, side seal, lintel seal, intermediate seal between the door sections.

Note regarding surface coating

For the following colours, sectional doors SPU 67 Thermo, APU 67 Thermo and ALR 67 Thermo with door widths from 5010 to 5500 mm in combination with track applications NH, GD, GS, GK, H, HD, HS, HK, HA, HU, RD, RS, RK, V, VA, VS, VU and WS are equipped with door leaf reinforcements to reduce the possibility of section deflection caused by sun exposure and require technical inspection.

RAL 3007 Black red
RAL 5003 Sapphire blue
RAL 5004 Black blue
RAL 5011 Steel blue
RAL 5013 Cobalt blue
RAL 5020 Ocean blue
RAL 5022 Night blue

RAL 6004 Blue green
RAL 6005 Moss green
RAL 6007 Bottle green
RAL 6008 Brown green
RAL 6009 Fir green
RAL 6012 Black green
RAL 6015 Black olive

RAL 6022 Olive drab
RAL 7016 Anthracite grey
RAL 7021 Black grey
RAL 7043 Traffic grey
RAL 8014 Sepia brown
RAL 8016 Mahogany brown
RAL 8017 Chocolate brown

RAL 8019 Grey brown
RAL 8022 Black brown
RAL 8028 Terra brown
RAL 9004 Signal black
RAL 9005 Jet black
RAL 9011 Graphite black
RAL 9017 Traffic black

Colour CH 703

Technical data overview

Construction and quality features

			SPU 67 Thermo	APU 67 Thermo	ALR 67 Thermo	ALR 67 Thermo Glazing
Resistance to wind load EN 12424	Door without wicket door	LZ ≤ 4000, class	4 5) 10)	4 5)	4 5)	4 4) 5)
		LZ ≤ 8000, class	3 6) 10)	3 6)	3 6)	3 4.6)
		LZ > 8000, class	3 6) 10)	3 6)	3 6)	–
		LZ > 9000, class	2 7) 10)	2 7)	2 7)	–
	Door with wicket door	LZ ≤ 4000, class	4 6) 10)	4 6)	4 6)	–
		LZ > 4000, class	2 7) 10)	2 7)	2 7)	–
Water tightness EN 12425	Door without wicket door, class		3 (70 Pa)	3 (70 Pa)	3 (70 Pa)	3 (70 Pa)
Air permeability EN 12426	Door without wicket door, class		2 8)	2 8)	2 8)	2 8)
	Door with wicket door, class		1 9)	1 9)	1 9)	1 9)
Acoustic value EN 717-1	Door without wicket door R_w = dB		25 11)	23	23 (30 1))	30 1)
	Door with wicket door R_w = dB		24 11)	22 (29 1))	22 (29 1))	–
Nhermal resistance EN 13241-1, appendix B EN 12428	Door without wicket door, U = W/m²·K 2)		0.62 (0.51 3))	2.1 (2.0 3))	2.2 (2.1 3))	–
	- Optional quadruple panes U = W/m²·K 2)		–	1.8 (1.7 3))	1.9 (1.8 3))	–
	- Optional climatic double panes made of single-pane safety glass, U = W/m²·K 2)		–	1.6 (1.5 3))	1.7 (1.6 3))	1.8 (1.7 3))
	- Optional double glazing made of single-pane safety glass U = W/m²·K 2)		–	2.6 (2.5 3))	2.7 (2.6 3))	3.0 (2.9 3))
	Door with wicket door, U = W/m²·K 2)		0.82 (0.75 3))	2.3 (2.2 3))	2.4 (2.3 3))	–
	- Optional quadruple panes U = W/m²·K 2)		–	2.0 (1.9 3))	2.1 (2.1 3))	–
	– Section, U = W/m²·K		0,33	–	–	–
Construction	Self-supporting		●	●	●	●
	Depth, mm		67	67	67	67
Door sizes	Max. width mm, LZ		10000	10000	10000	5500
	Max. height mm, RM		7500	7500	7500	4000
Space requirements	From page 37					
Material, door leaf	Steel, double-skinned, 67 mm		●	●	–	–
	Aluminium, profile with thermal break		–	●	●	●
Surface finish, door leaf	Galvanized steel, coated RAL 9002		●	○	–	–
	Galvanized steel, coated RAL 9006		○	●	–	–
	Galvanized steel, coated RAL to choose		○	○	–	–
	Anodised aluminium E6 / C0		○	●	●	●
	Aluminium coated in RAL to choose		○	○	○	○
Door leaf reinforcement	From LZ mm		5510	5510	5510	3340
	Note regarding surface coating, see page 5 from LZ mm		5010	5010	5010	3340
Wicket door			○	○	○	–
Side door	Matching the door		○	○	○	○
Glazings	Type A section windows		○	–	–	–
	Type D section windows		○	–	–	–
	Glazing frame		○	●	●	●
Seals	All-round on 4 sides		●	●	●	●
	Intermediate seal between the door sections		●	●	●	●
ThermoFrame	PVC hard and soft seal		○	○	○	○
Locking systems	Inside locking		●	●	●	●
	Outside and inside locking		○	○	○	–
Anti-lift kit	For doors of up to 5 m height with shaft operator		●	●	●	●
Security equipment	Side trap guards		●	●	●	●
	Spring safety device for manual operation		●	●	●	●
	Safety catch for doors with shaft operator		●	●	●	●
Fastening options	Concrete		●	●	●	●
	Steel		●	●	●	●
	Brickwork		●	●	●	●
	Others on request		○	○	○	○

● = standard
○ = Optional

1) With optional double pane (single-pane safety glass)
2) For a door surface of 5000 × 5000 mm
3) Optionally with ThermoFrame
4) Door width up to 5500 mm
5) Class 4 = 1.0 kN/m² or 144 km/h
6) Class 3 = 0.7 kN/m² or 120 km/h
7) Class 2 = 0.45 kN/m² or 96 km/h
8) Class 2 = 12 m³/m²h
9) Class 1 = 24 m³/m²h
10) Lower class rating may apply for doors with compound glazing
11) For doors without glazing frame

Overview of track applications

N

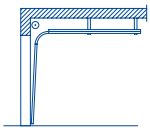

Normal track application

A WA 500 FU is required for
track application N3 with operator!

NA

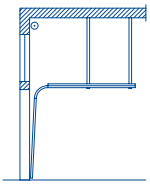

As with track application N, with high-mounted torsion spring shaft

Door height RM ≤ 5000 mm

ND

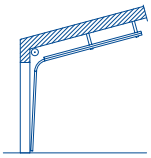

As with track application N with inclination (maximum 46°)

A WA 500 FU is required for track application ND3 with operator at an inclination of up to 6°!

NS

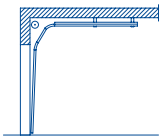

As with track application N with double radius

Door height RM ≤ 5000 mm

Version RC 2 only possible
with angle C = 40° and 45°.

NH

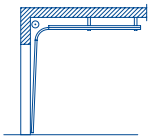

As with track application N, with minimum high-lift
Double radius 361 mm
Door leaf speed up to 500 mm/s possible.

Door height > 5000 mm
A WA 500 FU is required for track application NH3 with operator!

GD

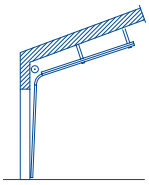

As with track application NH with inclination (maximum 28°)
Double radius 361 mm

Door height RM ≤ 5000 mm

L

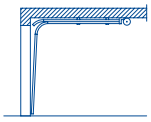

Low headroom track application

Door height RM ≤ 5000 mm

LD

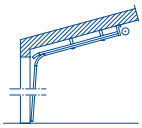

As with track application L with inclination (maximum 30°)

Door height RM ≤ 5000 mm

H

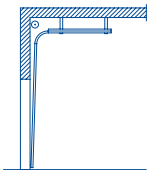

High-lift track application

HA

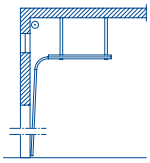

As with track application H, with high-mounted torsion spring shaft

Door height RM ≤ 3500 mm

HD

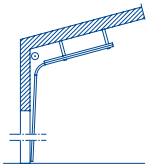

As with track application H with inclination (maximum 30°)

HU

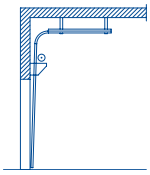

As with track application H, with low-mounted torsion spring shaft

RD

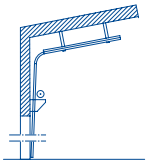

As with track application HU, with inclination

Door height RM ≤ 5000 mm

V

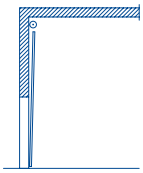

Vertical track application
(Additional hand pulley required for manually operated doors!)

Overview of track applications

VA

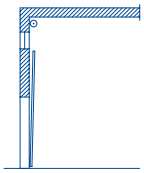

As with track application V, with high-mounted torsion spring shaft
(Additional hand pulley required for manually operated doors!)

Door height RM ≤ 3500 mm

VU

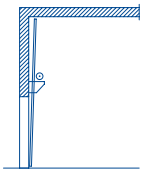

As with track application V, with low-mounted torsion spring shaft
(Additional hand pulley required for manually operated doors!)

Notice:
An in-factory technical inspection is required for the following track applications!

NK

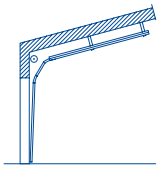

As with track application NS, but the degree values of both radii are adapted to the situation on-site

Door height RM ≤ 5000 mm

RC 2 version only possible
with angle C = 40° and 45°.

GS

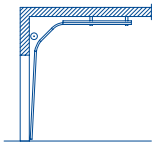

As with track application NH with double radius

Door height RM ≤ 5000 mm

GK

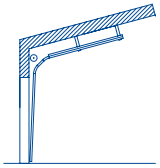

As with track application NH with double radius and inclination
Double radius 361 mm

Door height RM ≤ 5000 mm

HS

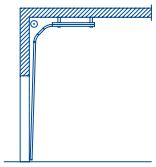

As with track application H with double radius

HK

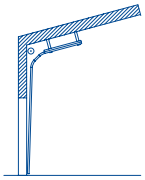

As with track application H, with double radius and inclination

VS

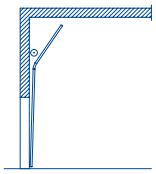

As with track application V, but in the top sections the tracks are diverted using radii where the ceiling is too low
(Additional hand pulley required for manually operated doors!)

WS

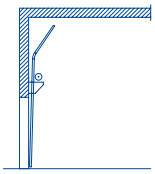

As with track application VU, but in the top sections the tracks are diverted using radii where the ceiling is too low
(Additional hand pulley required for manually operated doors!)

Door height RM ≥ 2250 mm

RS

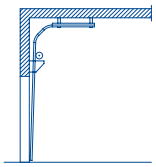

As with track application HU with double radius

Door height RM ≤ 5000 mm

RK

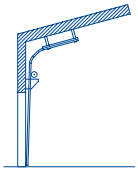

As with track application HU, with double radius and inclination

Door height RM ≤ 5000 mm

Sectional door SPU 67 Thermo

Double-skinned steel sectional door with thermal break

Stucco-textured / Micrograin

Door sections 625 and 750 mm high

External views

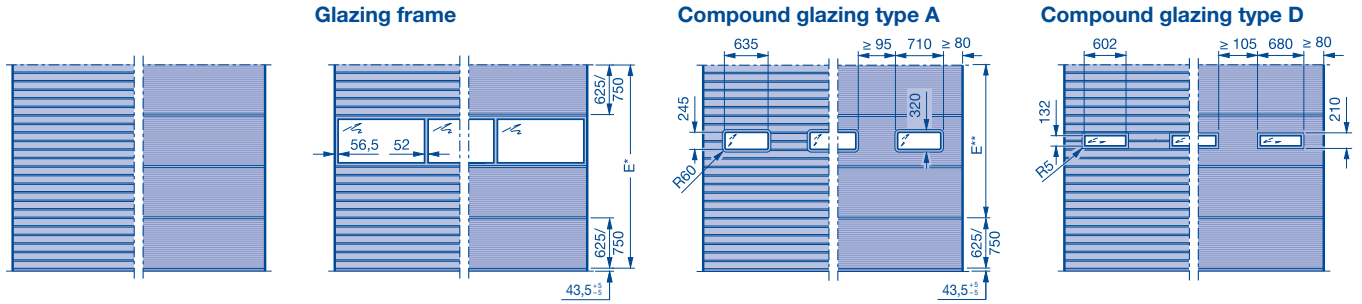

E* Fitting area for frames with glazing
E** Fitting area for compound glazing

Size range

The validity tables with the size range shown are based on the standard door type version (see product description). In case of deviations, the valid size ranges in the product configurator must be taken into account. Any door width in 10 mm increments possible. Intermediate heights using glazing frames or shortened top door section are possible!

RM	Range	n_1 TH 625	n_1 TH 750
7500	Range 3	–	10
7375	Range 3	1 +	9
7250	Range 3	2 +	8
7125	Range 3	3 +	7
7000	Range 3	4 +	6
6875	Range 3	5 +	5
6750	Range 3	–	9
6625	Range 3	1 +	8
6500	Range 3	2 +	7
6375	Range 3	3 +	6
6250	Range 3	4 +	5
6125	Range 3	5 +	4
6000	Range 3	–	8
5875	Range 3	1 +	7
5750	Range 3	2 +	6
5625	Range 3	3 +	5
5500	Range 3	4 +	4
5375	Range 3	5 +	3
5250	Range 3	–	7
5125	Range 3	1 +	6
5000	Range 2	2 +	5
4875	Range 2	3 +	4
4750	Range 2	4 +	3
4625	Range 2	5 +	2
4500	Range 2	–	6
4375	Range 2	1 +	5
4250	Range 2	2 +	4
4125	Range 2	3 +	3
4000	Range 2	4 +	2
3875	Range 2	5 +	1
3750	Range 2	–	5
3625	Range 2	1 +	4
3500	Range 1	2 +	3
3375	Range 1	3 +	2
3250	Range 1	4 +	1
3125	Range 1	5	–
3000	Range 1	–	4
2875	Range 1	1 +	3
2750	Range 1	2 +	2
2625	Range 1	3 +	1
2500	Range 1	4	–
2375	Range 1	4****	–
2250	Range 1	–	3
2125	Range 1	1 +	2
2000	Range 1	2 +	1
1875	Range 1	3	–

1		2					3					4					5								Number of infills / fields per aluminium frame
[1]		2					3					4					5								Number of compound glazings per door section
1500	2000	2250	2500	2750	3000	3250	3500	3750	4000	4250	4500	4750	5000	5250	5500	5750	6000								

SPB 52

LZ →

Notices:

- When using a shaft operator (installation example 5), the door locking is always opposite the operator side.
- For a view of the matching appearance with doors with wicket doors see page 26 – 28.
- Doors with more than 2 glazing frames on request.
- Versions with glazing S4, U4, A4, B4, M4, C4 on request.

On request: torsion spring shaft or direct drive operator

Versions with glazing frame on request

For note on trap guard, see page 5

[1] **Type A** → 1670, **Type D** → 1630
n_1 No. of door sections
RM Grid height
LZ Clear frame dimensions **(from 1200)**
→ up to LZ
SPB Rail width
TH Door section height
******** Top door section 500 mm

Sectional door SPU 67 Thermo with wicket door and trip-free threshold

Double-skinned steel sectional door with thermal break

Stucco-textured / Micrograin, door sections 625 and 750 mm high

External views

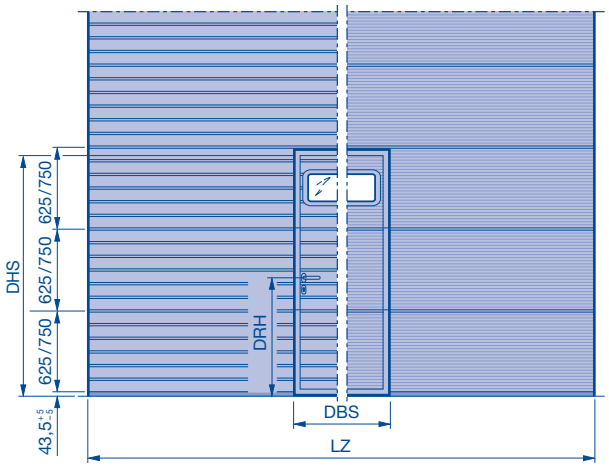

**** Note on fitting compound glazings:**
For door widths from 1750 – 3000 mm, a compound glazing can **only** be fitted in the wicket door.
No compound glazing can be fitted to the left or right of the wicket door.

Wicket door clear passage width (DBS) = 905 mm*

* For a door width of 1750 - 1840 mm, the clear passage width is 798 mm.
For door widths below 1750 mm, the clear passage width (DBS) depends on the door width and is much smaller than standard dimensions.

Lever heights (DRH)
Bottom door section 625 = 960.5
Bottom door section 750 = 1085.5

Size range

The validity tables with the size range shown are based on the standard door type version (see product description). In case of deviations, the valid size ranges in the product configurator must be taken into account. Any door width in 10 mm increments possible. Intermediate heights using glazing frames or a shortened top door section above the wicket door are possible!

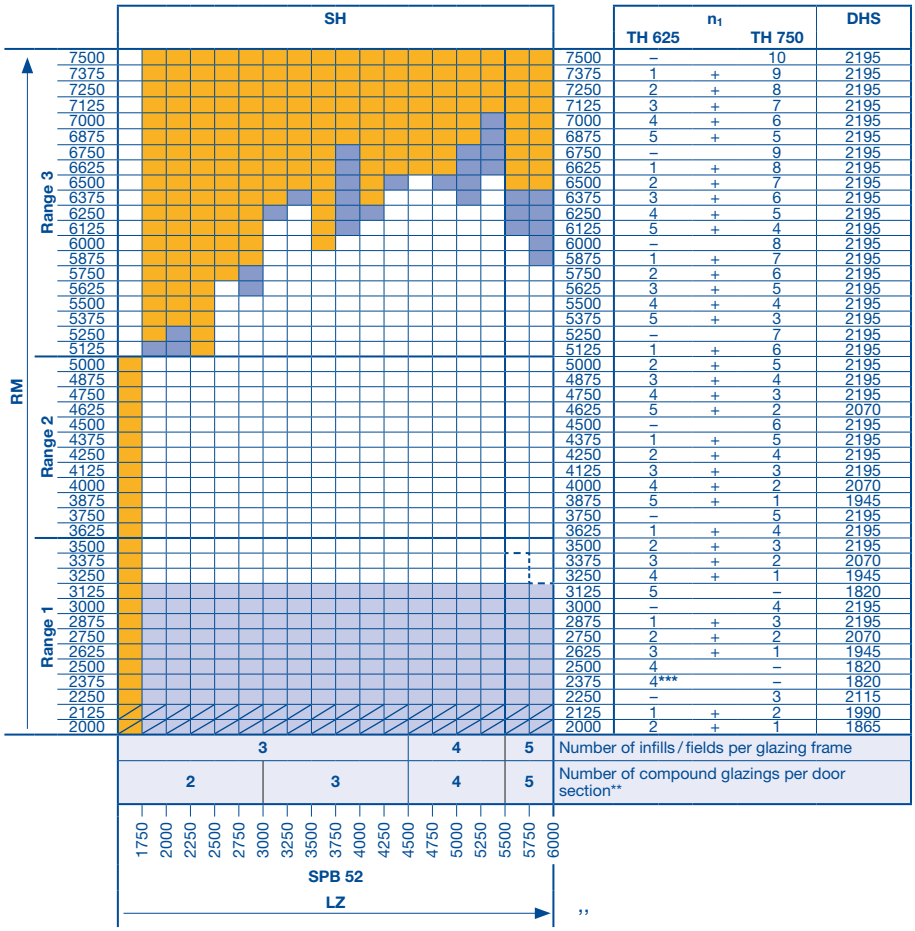

RM	SH	n_1 TH 625		n_1 TH 750	DHS
7500	7500	–		10	2195
7375	7375	1	+	9	2195
7250	7250	2	+	8	2195
7125	7125	3	+	7	2195
7000	7000	4	+	6	2195
6875	6875	5	+	5	2195
6750	6750	–		9	2195
6625	6625	1	+	8	2195
6500	6500	2	+	7	2195
6375	6375	3	+	6	2195
6250	6250	4	+	5	2195
6125	6125	5	+	4	2195
6000	6000	–		8	2195
5875	5875	1	+	7	2195
5750	5750	2	+	6	2195
5625	5625	3	+	5	2195
5500	5500	4	+	4	2195
5375	5375	5	+	3	2195
5250	5250	–		7	2195
5125	5125	1	+	6	2195
5000	5000	2	+	5	2195
4875	4875	3	+	4	2195
4750	4750	4	+	3	2195
4625	4625	5	+	2	2070
4500	4500	–		6	2195
4375	4375	1	+	5	2195
4250	4250	2	+	4	2195
4125	4125	3	+	3	2195
4000	4000	4	+	2	2070
3875	3875	5	+	1	1945
3750	3750	–		5	2195
3625	3625	1	+	4	2195
3500	3500	2	+	3	2195
3375	3375	3	+	2	2070
3250	3250	4	+	1	1945
3125	3125	5		–	1820
3000	3000	–		4	2195
2875	2875	1	+	3	2195
2750	2750	2	+	2	2070
2625	2625	3	+	1	1945
2500	2500	4		–	1820
2375	2375	4***		–	1820
2250	2250	–		3	2115
2125	2125	1	+	2	1990
2000	2000	2	+	1	1865

Notices:

- When using a shaft operator (installation example 5), the door locking is always opposite the operator side.
- For a view of the matching appearance with doors without wicket doors see page 26 – 28.
- Doors with more than 2 glazing frames on request.
- Versions with glazing S4, U4, A4, B4, M4, C4 on request.

On request: torsion spring shaft or direct drive operator
Versions with glazing frame on request
For note on trap guard, see page 5
Glazings on request
Range change
Range change with glazing frame

n_1	Number of door sections
DHS	Clear passage heights of wicket door to grid height
SH	Threshold height **(rising from 5 to 10)**
SPB	Rail width
TH	Door section height
DHS	Wicket door clear passage height
RM	Grid height
DBS	Wicket door clear passage width
DRH	Lever height
LZ	Clear frame dimensions **(from 1500)**
***	Top door section 500 mm

Sectional door SPU 67 Thermo with wicket door and threshold rail

Double-skinned steel sectional door with thermal break

Stucco-textured / Micrograin, door sections 625 and 750 mm high

External views

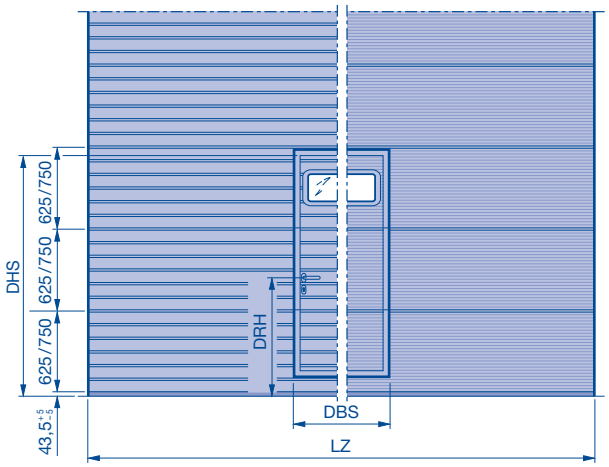

**** Note on fitting compound glazings:**
For door widths from 1750 – 3000 mm, a compound glazing can **only** be fitted in the wicket door.
No compound glazing can be fitted to the left or right of the wicket door.

Wicket door clear passage width (DBS) = 905 mm*

* For a door width of 1750 - 1840 mm, the clear passage width is 798 mm.
For door widths below 1750 mm, the clear passage width (DBS) depends on the door width and is much smaller than standard dimensions.

Lever heights (DRH)
Bottom door section 625 = 960.5
Bottom door section 750 = 1085.5

Size range

The validity tables with the size range shown are based on the standard door type version (see product description). In case of deviations, the valid size ranges in the product configurator must be taken into account. Possible for any door width in 10 mm increments. Intermediate heights using glazing frames or a shortened top door section above the wicket door are possible!

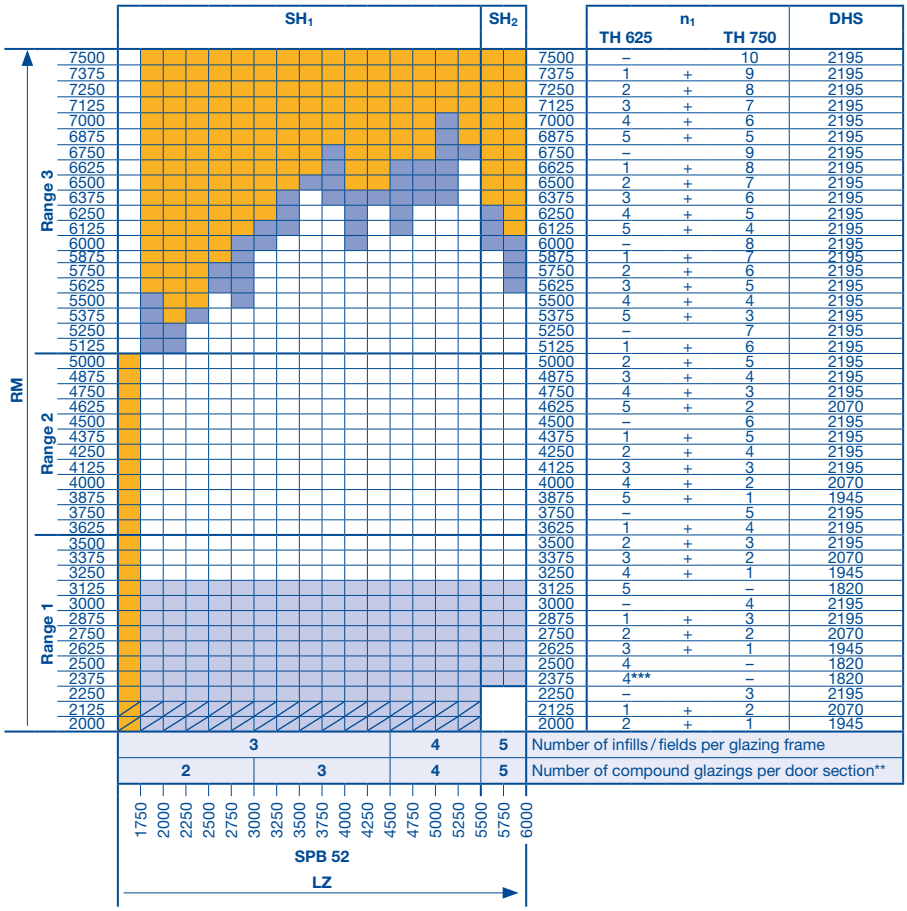

RM	n1 TH 625		n1 TH 750	DHS
7500	–		10	2195
7375	1	+	9	2195
7250	2	+	8	2195
7125	3	+	7	2195
7000	4	+	6	2195
6875	5	+	5	2195
6750	–		9	2195
6625	1	+	8	2195
6500	2	+	7	2195
6375	3	+	6	2195
6250	4	+	5	2195
6125	5	+	4	2195
6000	–		8	2195
5875	1	+	7	2195
5750	2	+	6	2195
5625	3	+	5	2195
5500	4	+	4	2195
5375	5	+	3	2195
5250	–		7	2195
5125	1	+	6	2195
5000	2	+	5	2195
4875	3	+	4	2195
4750	4	+	3	2195
4625	5	+	2	2070
4500	–		6	2195
4375	1	+	5	2195
4250	2	+	4	2195
4125	3	+	3	2195
4000	4	+	2	2070
3875	5	+	1	1945
3750	–		5	2195
3625	1	+	4	2195
3500	2	+	3	2195
3375	3	+	2	2070
3250	4	+	1	1945
3125	5		–	1820
3000	–		4	2195
2875	1	+	3	2195
2750	2	+	2	2070
2625	3	+	1	1945
2500	4		–	1820
2375	4***		–	1820
2250	–		3	2195
2125	1	+	2	2070
2000	2	+	1	1945

Notices:

- When using a shaft operator (installation example 5), the door locking is always opposite the operator side.
- For a view of the matching appearance with doors without wicket doors see page 26 – 28.
- Doors with more than 2 glazing frames on request.
- Versions with glazing S4, U4, A4, B4, M4, C4 on request.
- For versions with real glass infill in the wicket door, the threshold height SH2 begins at LZ 4510 mm.

On request: torsion spring shaft or direct drive operator
Versions with glazing frame on request
For note on trap guard, see page 5
Glazings on request

n_1	Number of door sections
DHS	Clear passage heights of wicket door to grid height
SH_1	Threshold height **(220)**
SH_2	Threshold height **(317)**, bottom door section with 250 mm aluminium bottom section,
SPB	Rail width
TH	Door section height
DHS	Wicket door clear passage height
RM	Grid height
DBS	Wicket door clear passage width
DRH	Lever height
LZ	Clear frame dimensions **(from 1500)**
***	Top door section 500 mm

Sectional door SPU 67 Thermo
Double-skinned steel sections

Double-skinned steel sectional door with thermal break
Stucco-textured / Micrograin, door sections 375 and 500 mm high

External views

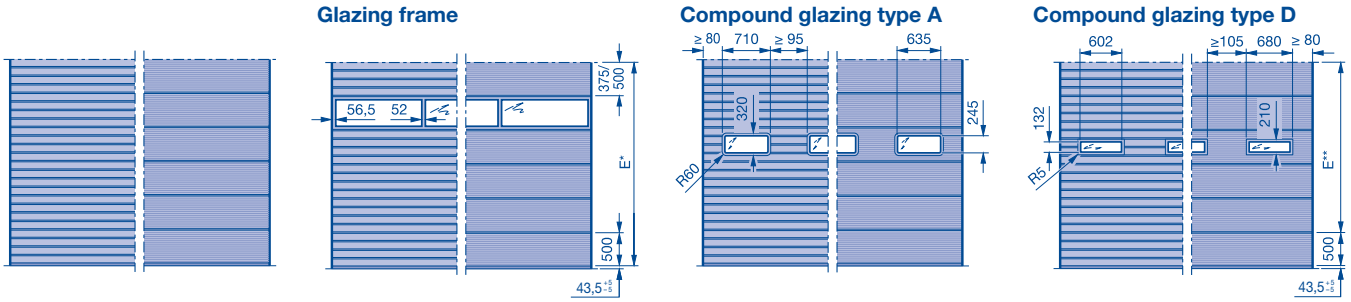

E* Fitting area for frame 500 with glazing
E** Fitting area for compound glazing

Size range

The validity tables with the size range shown are based on the standard door type version (see product description). In case of deviations, the valid size ranges in the product configurator must be taken into account. Any door width in 10 mm increments possible. Intermediate heights using glazing frames or shortened top door section are possible!

Notices:

- For a view of the matching appearance with doors with wicket doors see page 26 – 28.
- Doors with more than 2 glazing frames on request.
- Versions with glazing S4, U4, A4, B4, M4, C4 on request.

On request: torsion spring shaft or direct drive operator
On request and only direct drive operator S140 with track application H
Versions with glazing frame on request
For note on trap guard, see page 5
Range change
Range change with glazing frame

[1] **Type A** → 1670, **Type D** → 1630
n_1 Number of door sections
RM Grid height
LZ Clear frame dimensions **(from 1200)**
→ up to LZ
SPB Rail width
TH Door section height

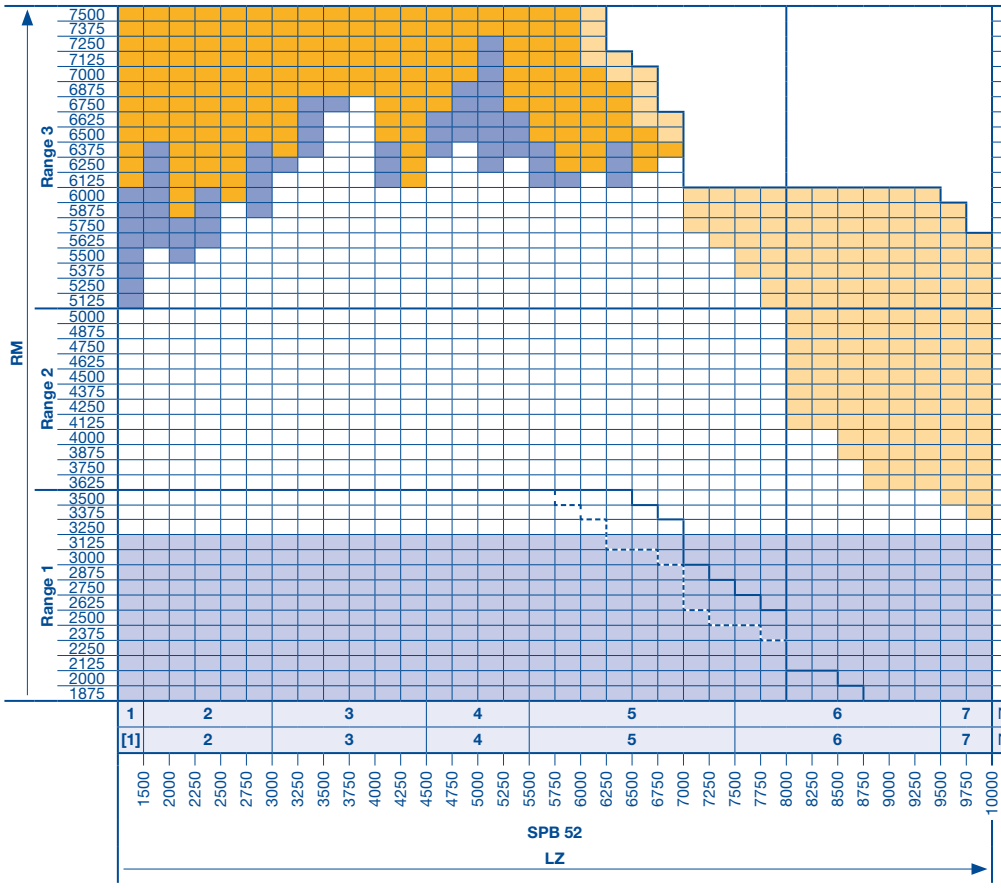

	n_1 TH 375		TH 500
7500	–		15
7375	1	+	14
7250	2	+	13
7125	3	+	12
7000	–		14
6875	1	+	13
6750	2	+	12
6625	3	+	11
6500	–		13
6375	1	+	12
6250	2	+	11
6125	3	+	10
6000	–		12
5875	1	+	11
5750	2	+	10
5625	3	+	9
5500	–		11
5375	1	+	10
5250	2	+	9
5125	3	+	8
5000	–		10
4875	1	+	9
4750	2	+	8
4625	3	+	7
4500	–		9
4375	1	+	8
4250	2	+	7
4125	3	+	6
4000	–		8
3875	1	+	7
3750	2	+	6
3625	3	+	5
3500	–		7
3375	1	+	6
3250	2	+	5
3125	3	+	4
3000	–		6
2875	1	+	5
2750	2	+	4
2625	3	+	3
2500	–		5
2375	1	+	4
2250	2	+	3
2125	3	+	2
2000	–		4
1875	1	+	3

Number of infills / fields per glazing frame
Number of compound glazings per door section

Sectional door SPU 67 Thermo with wicket door and trip-free threshold

Double-skinned steel sectional door with thermal break

Stucco-textured / Micrograin, door sections 375 and 500 mm high

Viewed from outside

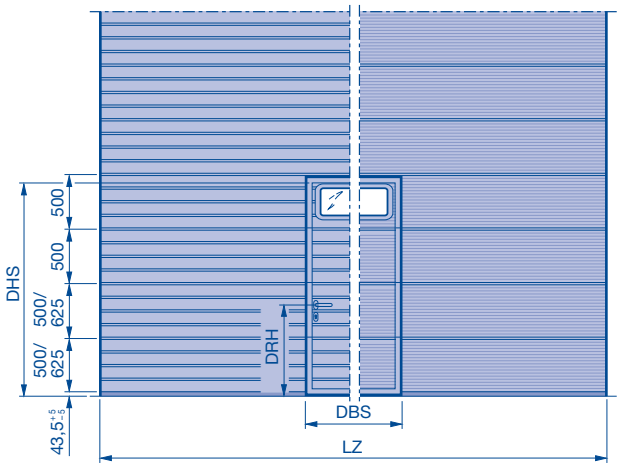

**** Note on fitting compound glazings:**
For door widths from 1750 – 3000 mm, a compound glazing can **only** be fitted in the wicket door.
No compound glazing can be fitted to the left or right of the wicket door.

Wicket door clear passage width (DBS) = 905 mm*

* For a door width of 1750 - 1840 mm, the clear passage width is 798 mm.
For door widths below 1750 mm, the clear passage width (DBS) depends on the door width and is much smaller than standard dimensions.

Lever heights (DRH)
Bottom door section 500 = 835.5
Bottom door section 625 = 960.5

Size range

The validity tables with the size range shown are based on the standard door type version (see product description). In case of deviations, the valid size ranges in the product configurator must be taken into account. Any door width in 10 mm increments possible. Intermediate heights using glazing frames or a shortened top door section above the wicket door are possible!

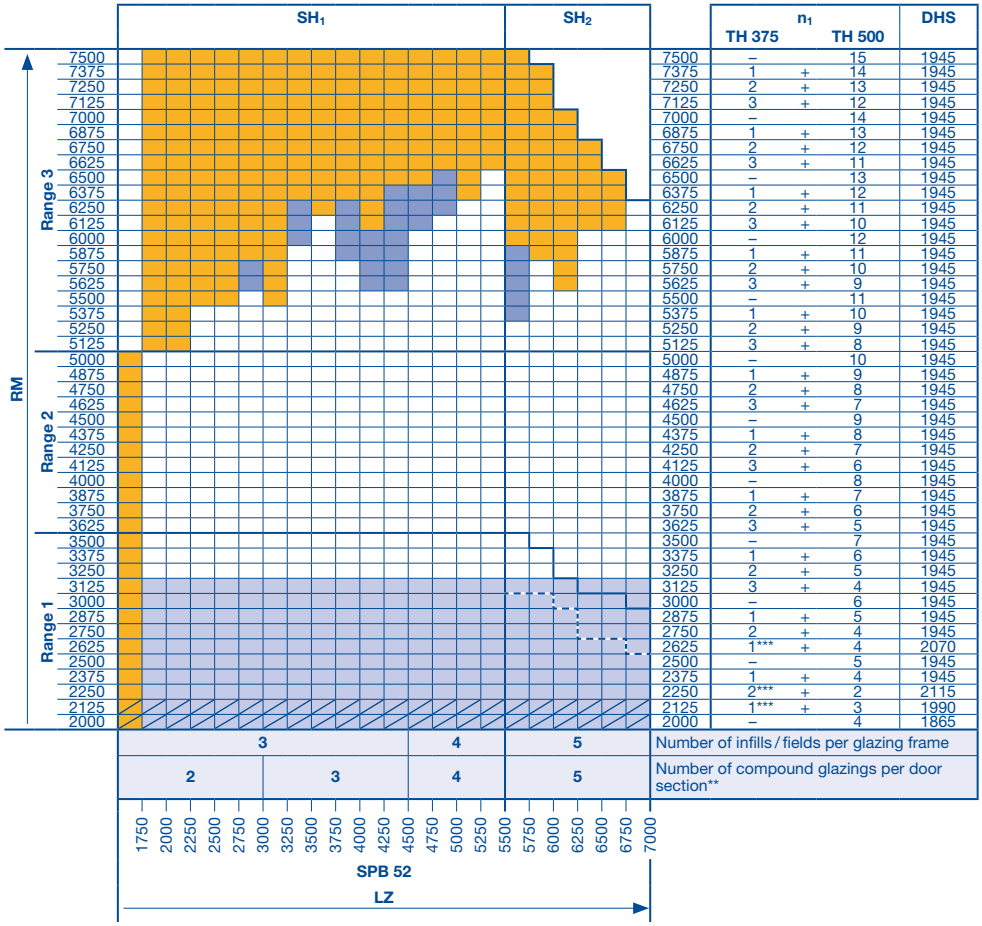

RM	n1 TH 375		n1 TH 500	DHS
7500	–		15	1945
7375	1	+	14	1945
7250	2	+	13	1945
7125	3	+	12	1945
7000	–		14	1945
6875	1	+	13	1945
6750	2	+	12	1945
6625	3	+	11	1945
6500	–		13	1945
6375	1	+	12	1945
6250	2	+	11	1945
6125	3	+	10	1945
6000	–		12	1945
5875	1	+	11	1945
5750	2	+	10	1945
5625	3	+	9	1945
5500	–		11	1945
5375	1	+	10	1945
5250	2	+	9	1945
5125	3	+	8	1945
5000	–		10	1945
4875	1	+	9	1945
4750	2	+	8	1945
4625	3	+	7	1945
4500	–		9	1945
4375	1	+	8	1945
4250	2	+	7	1945
4125	3	+	6	1945
4000	–		8	1945
3875	1	+	7	1945
3750	2	+	6	1945
3625	3	+	5	1945
3500	–		7	1945
3375	1	+	6	1945
3250	2	+	5	1945
3125	3	+	4	1945
3000	–		6	1945
2875	1	+	5	1945
2750	2	+	4	1945
2625	1***	+	4	2070
2500	–		5	1945
2375	1	+	4	1945
2250	2***	+	2	2115
2125	1***	+	3	1990
2000	–		4	1865

Number of infills / fields per glazing frame

Number of compound glazings per door section**

Notice:

- For a view of the matching appearance with doors without wicket door, see pages 26 – 28.
- Doors with more than 2 glazing frames on request.
- For versions with real glass infill in the wicket door, the threshold height **SH2** begins at LZ 4510 mm.
- Versions with glazing S4, U4, A4, B4, M4, C4 on request.

On request: torsion spring shaft or direct drive operator
Versions with glazing frame on request
For note on trap guard, see page 5
Glazings on request
Range change
Range change with glazing frame

n1	Number of door sections
DHS	Clear passage heights of wicket door to grid height
RM	Grid height
LZ	Clear frame dimensions **(from 1500)**
SH1	Threshold height **(rising from 5 to 10)**
SH2	Threshold height **(approx. 13)**
SPB	Rail width
TH	Door section height
DHS	Wicket door clear passage height
DBS	Wicket door clear passage width
DRH	Lever height
*******	Bottom door section TH = 625

Sectional door SPU 67 Thermo with wicket door and threshold rail

Double-skinned steel sectional door with thermal break

Stucco-textured / Micrograin, door sections 375 and 500 mm high

Viewed from outside

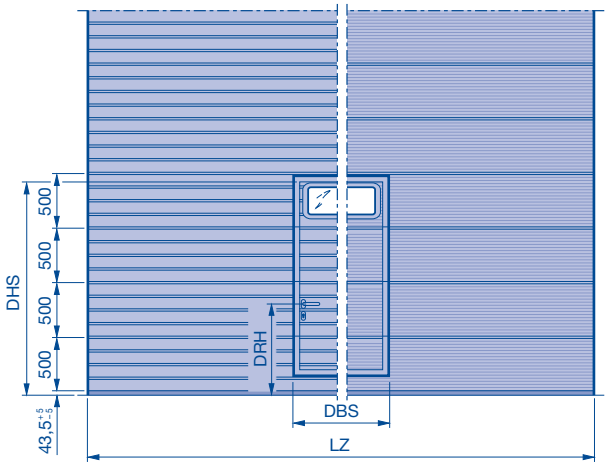

**** Note on fitting compound glazings:**
For door widths from 1750 – 3000 mm, a compound glazing can **only** be fitted in the wicket door.
No compound glazing can be fitted to the left or right of the wicket door.

Wicket door clear passage width (DBS) = 905 mm*

* For a door width of 1750 - 1840 mm, the clear passage width is 798 mm.
For door widths below 1750 mm, the clear passage width (DBS) depends on the door width and is much smaller than standard dimensions.

Lever heights (DRH)
Bottom door section 500 = 835.5
Bottom door section 625 = 960.5 (only for SH_2)

Size range

The validity tables with the size range shown are based on the standard door type version (see product description). In case of deviations, the valid size ranges in the product configurator must be taken into account. Any door width in 10 mm increments possible. Intermediate heights using glazing frames or a shortened top door section above the wicket door are possible!

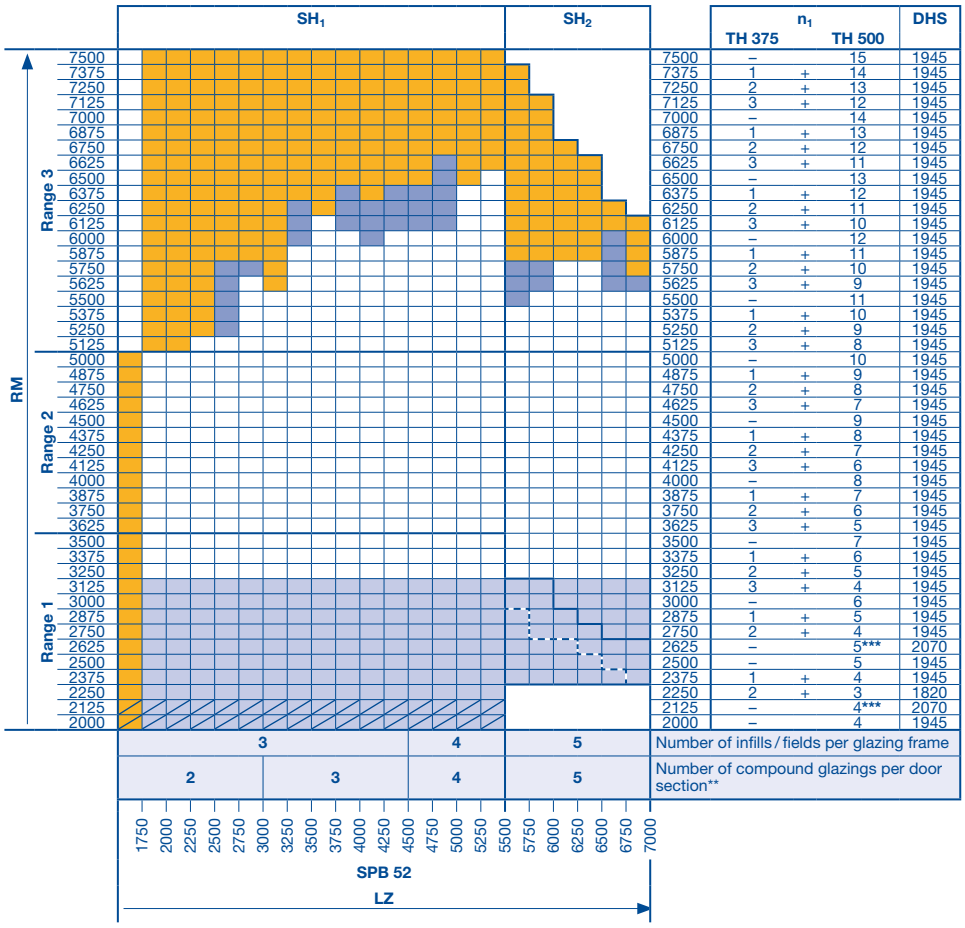

RM	n1 TH 375		n1 TH 500	DHS
7500	–		15	1945
7375	1	+	14	1945
7250	2	+	13	1945
7125	3	+	12	1945
7000	–		14	1945
6875	1	+	13	1945
6750	2	+	12	1945
6625	3	+	11	1945
6500	–		13	1945
6375	1	+	12	1945
6250	2	+	11	1945
6125	3	+	10	1945
6000	–		12	1945
5875	1	+	11	1945
5750	2	+	10	1945
5625	3	+	9	1945
5500	–		11	1945
5375	1	+	10	1945
5250	2	+	9	1945
5125	3	+	8	1945
5000	–		10	1945
4875	1	+	9	1945
4750	2	+	8	1945
4625	3	+	7	1945
4500	–		9	1945
4375	1	+	8	1945
4250	2	+	7	1945
4125	3	+	6	1945
4000	–		8	1945
3875	1	+	7	1945
3750	2	+	6	1945
3625	3	+	5	1945
3500	–		7	1945
3375	1	+	6	1945
3250	2	+	5	1945
3125	3	+	4	1945
3000	–		6	1945
2875	1	+	5	1945
2750	2	+	4	1945
2625	–		5***	2070
2500	–		5	1945
2375	1	+	4	1945
2250	2	+	3	1820
2125	–		4***	2070
2000	–		4	1945

Number of infills / fields per glazing frame: 3, 4, 5
Number of compound glazings per door section**: 2, 3, 4, 5

Notices:

- From LZ > 5500 mm bottom door section with deviating heights TH = 625 / 750 mm (made of 375 / 500 mm sections and 2 × 125 mm aluminium bottom profile).
- For a view of the matching appearance with doors without wicket door, see pages 26 – 28.
- Doors with more than 2 glazing frames on request.
- For versions with real glass infill in the wicket door, the threshold height **SH2** begins at LZ 4510 mm.
- Versions with glazing S4, U4, A4, B4, M4, C4 on request.

On request: torsion spring shaft or direct drive operator
Versions with glazing frame on request
For note on trap guard, see page 5
Glazings on request
Range change
Range change with glazing frame

n_1	Number of door sections
DHS	Clear passage heights of wicket door to grid height
RM	Grid height
LZ	Clear frame dimensions **(from 1500)**
SH_1	Threshold height **(220)**
SH_2	Threshold height **(317)**, bottom door section with 250 mm aluminium bottom section, **glazing from 625 mm**
SPB	Rail width
TH	Door section height
DHS	Wicket door clear passage height
DBS	Wicket door clear passage width
***	Bottom door section TH = 625

Glazing heights for matching external appearance SPU 67 Thermo Stucco-textured / Micrograin

(Centre of window from FFL)

Door section heights 500, 625 and 750 mm

Glazing heights for matching external appearance of compound glazing type A and D.

RM	Glazing heights (centre of window from FFL)											
	1160	1285	1535	1660	1785	1910	2035	2160	2285	2410	2535	2660
7500		X			X							
7375	X	X		X	X							X
7250	X	X	X	X	X		X		X		X	X
7125	X	X	X	X	X	X	X	X	X	X	X	X
7000		X			X				X			
6875	X	X		X	X			X	X			X
6750	X	X			X		X				X	X
6625	X	X		X	X	X	X			X	X	X
6500		X			X				X			
6375	X	X		X	X			X	X			X
6250	X	X	X	X	X		X	X	X		X	X
6125	X	X	X	X	X	X	X	X	X	X	X	X
6000		X			X							
5875	X	X		X	X							X
5750	X	X	X	X	X		X		X		X	X
5625	X	X	X	X	X	X	X	X	X	X	X	X
5500		X			X				X			
5375	X	X		X	X			X	X			X
5250	X	X			X		X				X	X
5125	X	X		X	X	X	X			X	X	X
5000		X			X				X			
4875	X	X		X	X			X	X			X
4750	X	X	X	X	X		X	X	X		X	X
4625	X	X	X	X	X	X		X	X	X	X	
4500		X			X							
4375	X	X		X	X							X
4250	X	X	X	X	X	X	X		X	X	X	X
4125	X	X	X	X	X	X	X	X	X	X	X	X
4000		X			X				X			
3875	X			X	X			X	X			
3750	X	X			X		X				X	X
3625	X	X		X	X	X	X			X	X	X
3500		X			X				X			
3375	X	X		X	X				X			
3250	X		X	X	X			X	X			
3125			X	X				X				
3000		X			X							
2875	X	X		X	X							X
2750	X	X	X	X	X						X	
2625	X		X	X						X		
2500									X			
2375				X				X				
2250	X	X					X					
2125	X					X						
2000					X							
1875				X								

RM Grid height

Calculating the glazing heights for SPU 67 Thermo

(Centre of window from FFL)

Door section heights 500, 625 and 750 mm

Calculating the glazing heights for compound glazing type A and type D.
See door type for number of door sections and glazing areas! Depth: 67 mm.

Door section height 750 mm

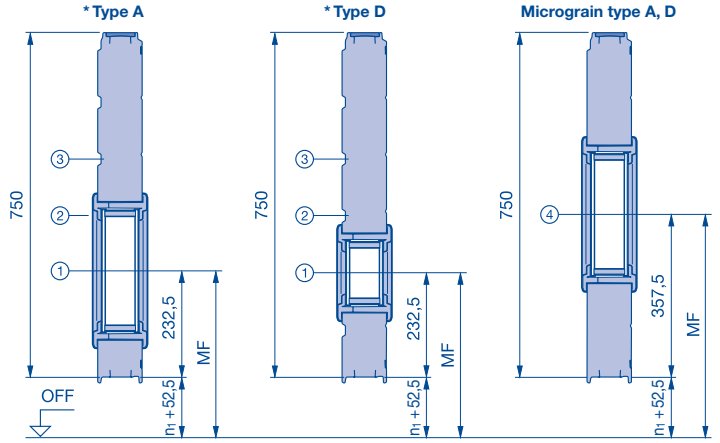

Glazing height type A and D

① = n_1 + 52.5 + 232.5
② = n_1 + 52.5 + 232.5 + 125
③ = n_1 + 52.5 + 232.5 + 250
④ = $_1$ + 52.5 + 357.5

Door section height 625 mm

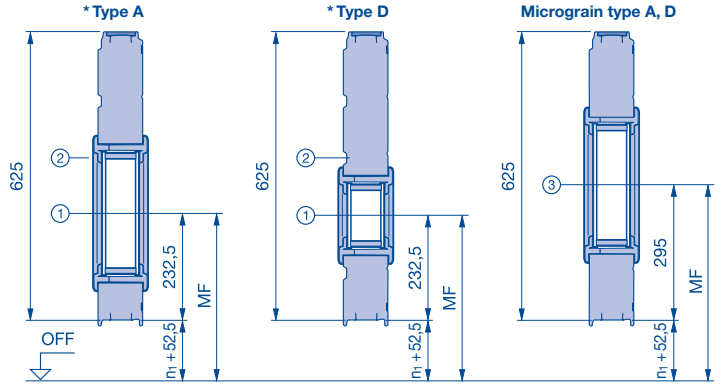

Glazing height type A and D

① = n_1 + 52.5 + 232.5
② = n_1 + 52.5 + 232.5 + 125
③ = n_1 + 52.5 + 295

Door section height 500 mm

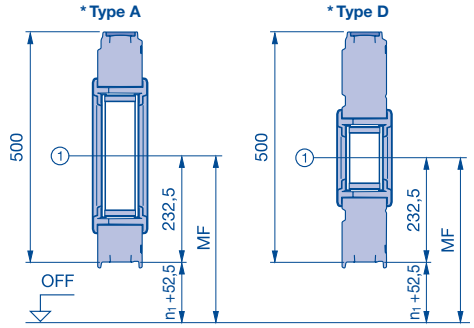

Glazing height type A and D

① = n_1 + 52.5 + 232.5

Calculation example

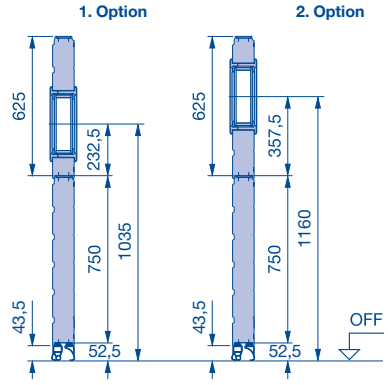

Given:

- Door type SPU 67 Thermo; grid height (RM) = 3250 mm; glazing type A; for position see number of door sections below (see table of door types)
- Door section 625 mm = 4 ×
- Door section 750 mm = 1 ×

Option	Door section / position	Glazing height
1	in 2nd door section 625 mm at position 1	750 + 52.5 + 232.5 = 1035 mm from FFL
2	in 2nd door section 625 mm at position 2	750 + 52.5 + 232.5 + 125 = 1160 mm from FFL
3	in 3rd door section 625 mm at position 1	750 + 625 + 52.5 + 232.5 = 1660 mm from FFL
4	in 3rd door section 625 mm at position 2	750 + 625 + 52.5 + 232.5 + 125 = 1785 mm from FFL
etc.		

* Stucco / Micrograin
MF Centre of window from FFL
n_1 Number of door sections
OFF Finished floor level (FFL)

Sectional door APU 67 Thermo

Glazed aluminium sectional door with thermal break

With steel bottom section

Viewed from outside

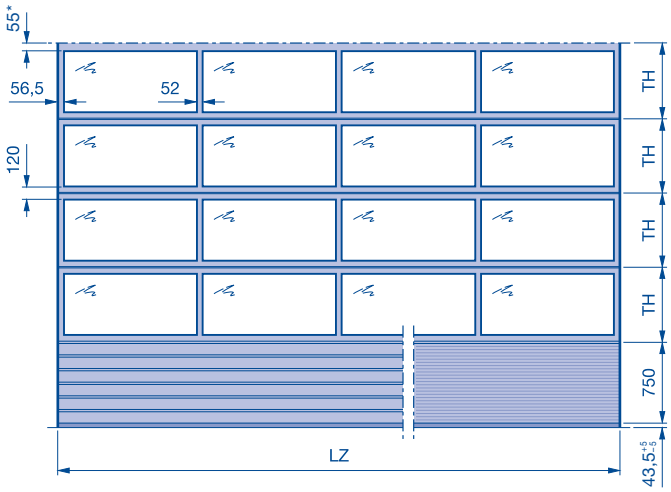

$$TH = \frac{\text{Door height} - \text{bottom section height} - 35}{\text{Number of door section frames}}$$

* On request 115 mm in order to match the appearance of a sectional door with wicket door with trip-free threshold with the same door height.

Notice:

- When using a shaft operator (installation example 5), the door locking is always opposite the operator side.
- For a view of the matching appearance with doors with wicket doors see page 26 – 28.

Size range

The validity tables with the size range shown are based on the standard door type version (see product description). In case of deviations, the valid size ranges in the product configurator must be taken into account. Any door width in 10 mm increments possible.

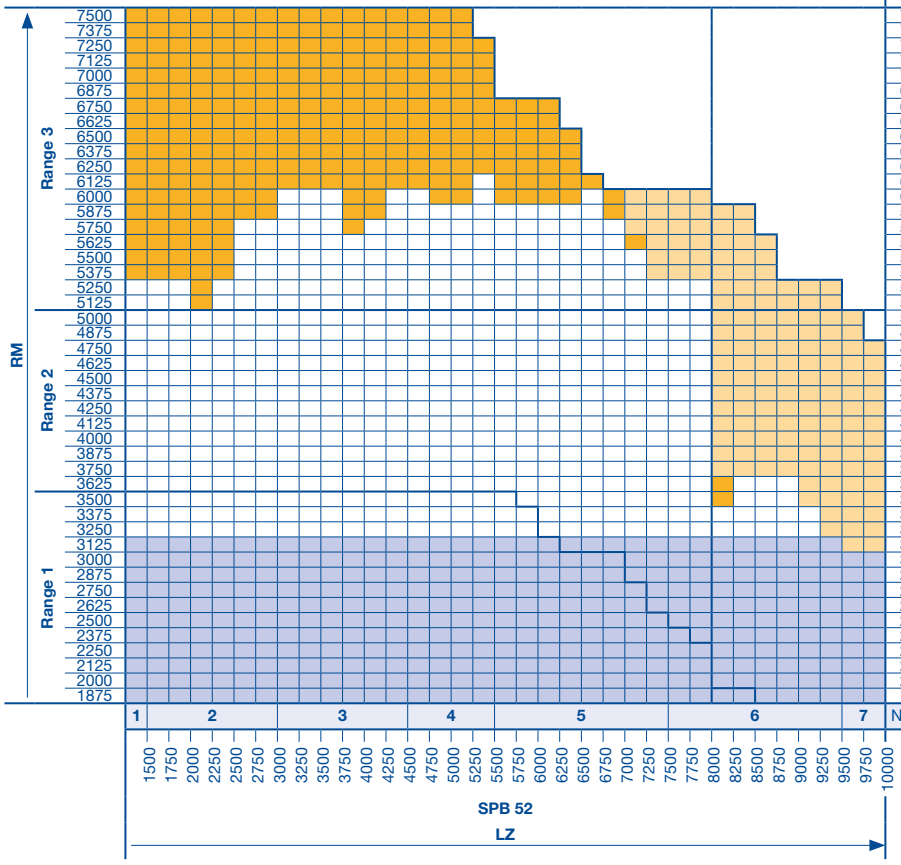

RM	LZ ≤ 8000 n_1	LZ ≤ 8000 SO_{750}	LZ ≤ 8000 n_1	LZ ≤ 8000 SO_{1500}	LZ > 8000 n_1	LZ > 8000 SO_{750}	LZ > 8000 n_1	LZ > 8000 SO_{1500}
7500		7500		7500		7500		7500
7375					12		11	
7250	9		8					7240
7125						7060		7230
7000						7050	10	
6875		6790		6790				
6750		6780		6780	11			6670
6625								6660
6500	8		7			6490	9	
6375						6480		
6250					10			
6125		6040		6040				6100
6000		6030		6030		5920		6090
5875						5910	8	
5750	7		6					
5625					9			5530
5500								5520
5375		5290		5290		5350	7	
5250		5280		5280		5340		
5125					8			
5000	6		5					5000
4875						4780		4950
4750						4770	6	
4625		4540		4540				
4500		4530		4530	7			4390
4375								4380
4250	5		4			4210	5	
4125						4200		
4000					6			
3875		3790		3790				3820
3750		3780		3780		3640		3810
3625						3630	4	
3500	4		3		5			
3375								
3250								3250
3125		3040		3040		3070		3240
3000		3030		3030		3060	3	
2875								
2750	3		2		4			2680
2625								2670
2500						2500		
2375		2290		2290		2490	2	
2250		2280		2280	3			
2125	2		1			1930		2110
2000						1920	1	2100
1875		1875		1875	2			

Number of infills / fields per glazing frame

SPB 52 / LZ
1500 1750 2000 2250 2500 2750 3000 3250 3500 3750 4000 4250 4500 4750 5000 5250 5500 5750 6000 6250 6500 6750 7000 7250 7500 7750 8000 8250 8500 8750 9000 9250 9500 9750 10000

Notice:
Glazing S4, U4, A4, B4, M4, XU, C4 on request.

On request: torsion spring shaft or direct drive operator

On request and only direct drive operator S140 with track application H

For note on trap guard, see page 5

Range change

SO_{750}	Bottom section height 750 mm (standard)
SO_{1500}	Bottom section height 1500 mm
n_1	Number of glazing frames
RM	Grid height
LZ	Clear frame dimensions **(from 1200)**
SPB	Rail width
TH	Door section height

Sectional door APU 67 Thermo with wicket door and trip-free threshold

Glazed aluminium sectional door with thermal break

With steel bottom section, bottom section height 750

Viewed from outside

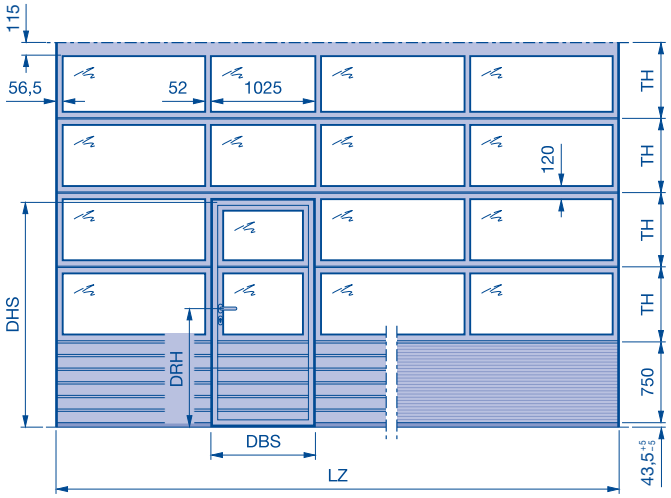

Lever height on request

Wicket door clear passage width (DBS) = 905 mm**

Clear passage height of wicket door (DHS) = Sn_1 × TH + (bottom section height – 55*)

Sn_1 Number of frames in the wicket door
* Attention: If there is no frame above the wicket door, then – 100 instead of – 55.
** For a door width of 1750 - 1840 mm, the clear passage width is 798 mm.
For door widths below 1750 mm, the clear passage width (DBS) depends on the door width and is much smaller than standard dimensions.

Notice:

- When using a shaft operator (installation example 5), the door locking is always opposite the operator side.
- For a view of the matching appearance with doors without wicket doors see page 26 – 28.

Size range

The validity tables with the size range shown are based on the standard door type version (see product description). In case of deviations, the valid size ranges in the product configurator must be taken into account. Any door width in 10 mm increments possible.

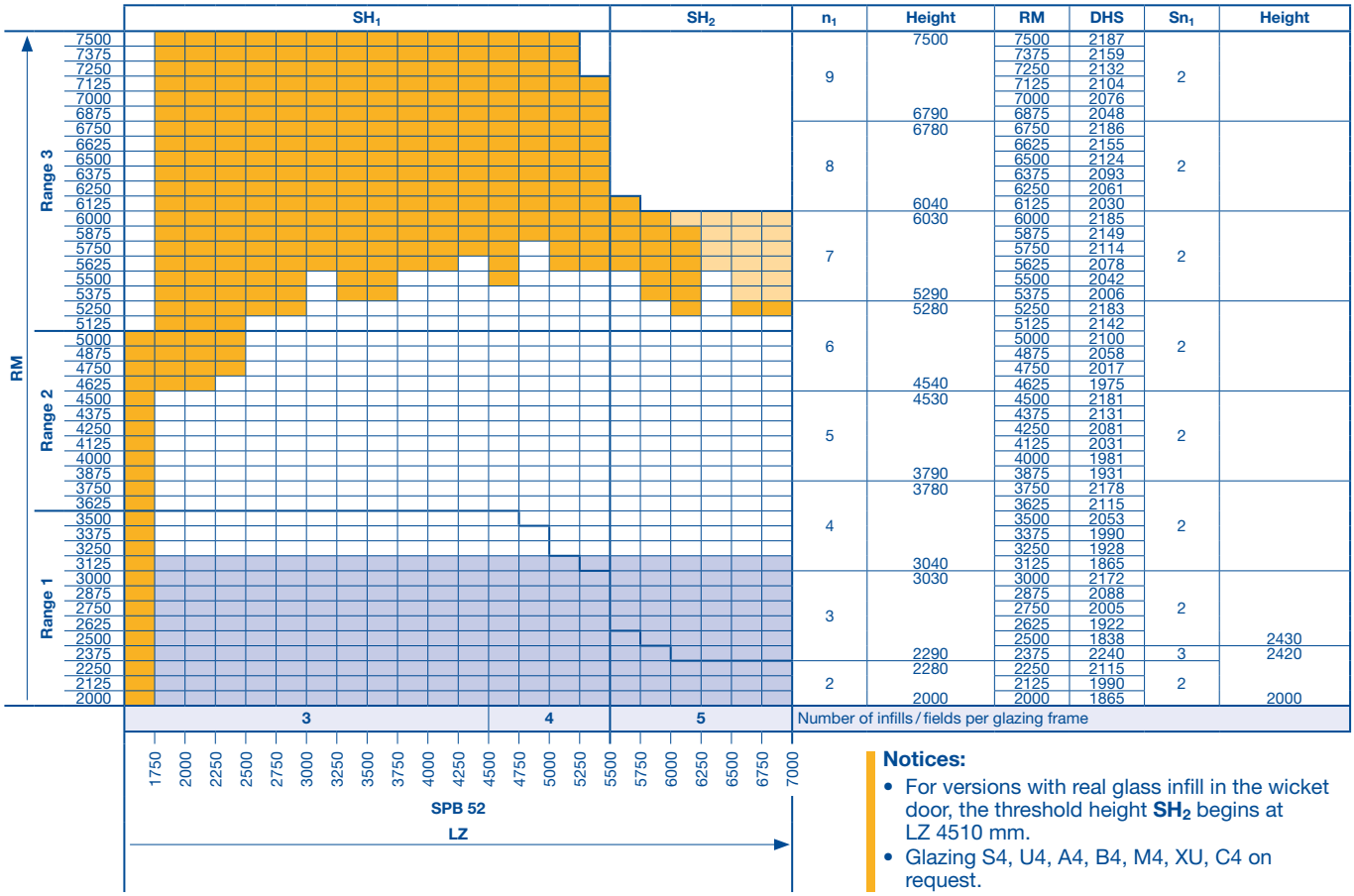

n_1	Height	RM	DHS	Sn_1	Height
9	7500	7500	2187	2	
		7375	2159		
		7250	2132		
		7125	2104		
		7000	2076		
	6790	6875	2048		
8	6780	6750	2186	2	
		6625	2155		
		6500	2124		
		6375	2093		
		6250	2061		
	6040	6125	2030		
7	6030	6000	2185	2	
		5875	2149		
		5750	2114		
		5625	2078		
		5500	2042		
	5290	5375	2006		
6	5280	5250	2183	2	
		5125	2142		
		5000	2100		
		4875	2058		
		4750	2017		
	4540	4625	1975		
5	4530	4500	2181	2	
		4375	2131		
		4250	2081		
		4125	2031		
		4000	1981		
	3790	3875	1931		
4	3780	3750	2178	2	
		3625	2115		
		3500	2053		
		3375	1990		
		3250	1928		
	3040	3125	1865		
3	3030	3000	2172	2	
		2875	2088		
		2750	2005		
		2625	1922		
		2500	1838		2430
	2290	2375	2240	3	2420
2	2280	2250	2115	2	
		2125	1990		
	2000	2000	1865		2000

Number of infills / fields per glazing frame

Notices:

- For versions with real glass infill in the wicket door, the threshold height **SH_2** begins at LZ 4510 mm.
- Glazing S4, U4, A4, B4, M4, XU, C4 on request.

On request: torsion spring shaft or direct drive operator
On request and only direct drive operator S140 with track application H
For note on trap guard, see page 5
Range change

DHS Wicket door clear passage height
DBS Wicket door clear passage width
DRH Lever height

LZ Clear frame dimensions **(from 1500)**
RM Grid height
SPB Rail width
SH_1 Threshold height **(rising from 5 to 10)**
SH_2 Threshold height **(approx. 13)**
n_1 Number of glazing frames
Sn_1 Number of glazing frames in the wicket door
TH Door section height

Sectional door APU 67 Thermo with wicket door and threshold rail

Glazed aluminium sectional door with thermal break

With steel bottom section, bottom section height 750

Viewed from outside

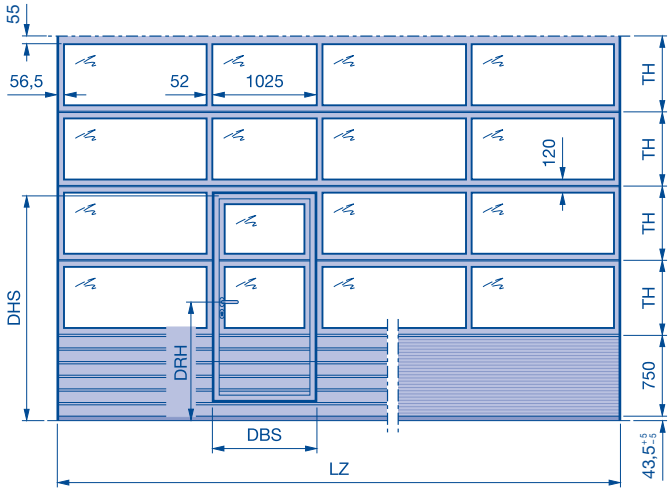

Lever height on request

Wicket door clear passage width (DBS) = 905 mm*

Wicket door passage height (DHS) = Sn_1 × TH + (bottom section height – 55)

Sn_1 Number of frames in the wicket door

* For a door width of 1750 - 1840 mm, the clear passage width is 798 mm.
For door widths below 1750 mm, the clear passage width (DBS) depends on the door width and is much smaller than standard dimensions.

Notice:

- When using a shaft operator (installation example 5), the door locking is always opposite the operator side.
- Bottom door section made of 375 / 500 mm section and 2 × 125 mm aluminium bottom profile for door widths > 5500 mm.
- For a view of the matching appearance with doors without wicket doors see page 26 – 28.

Size range

The validity tables with the size range shown are based on the standard door type version (see product description). In case of deviations, the valid size ranges in the product configurator must be taken into account. Any door width in 10 mm increments possible.

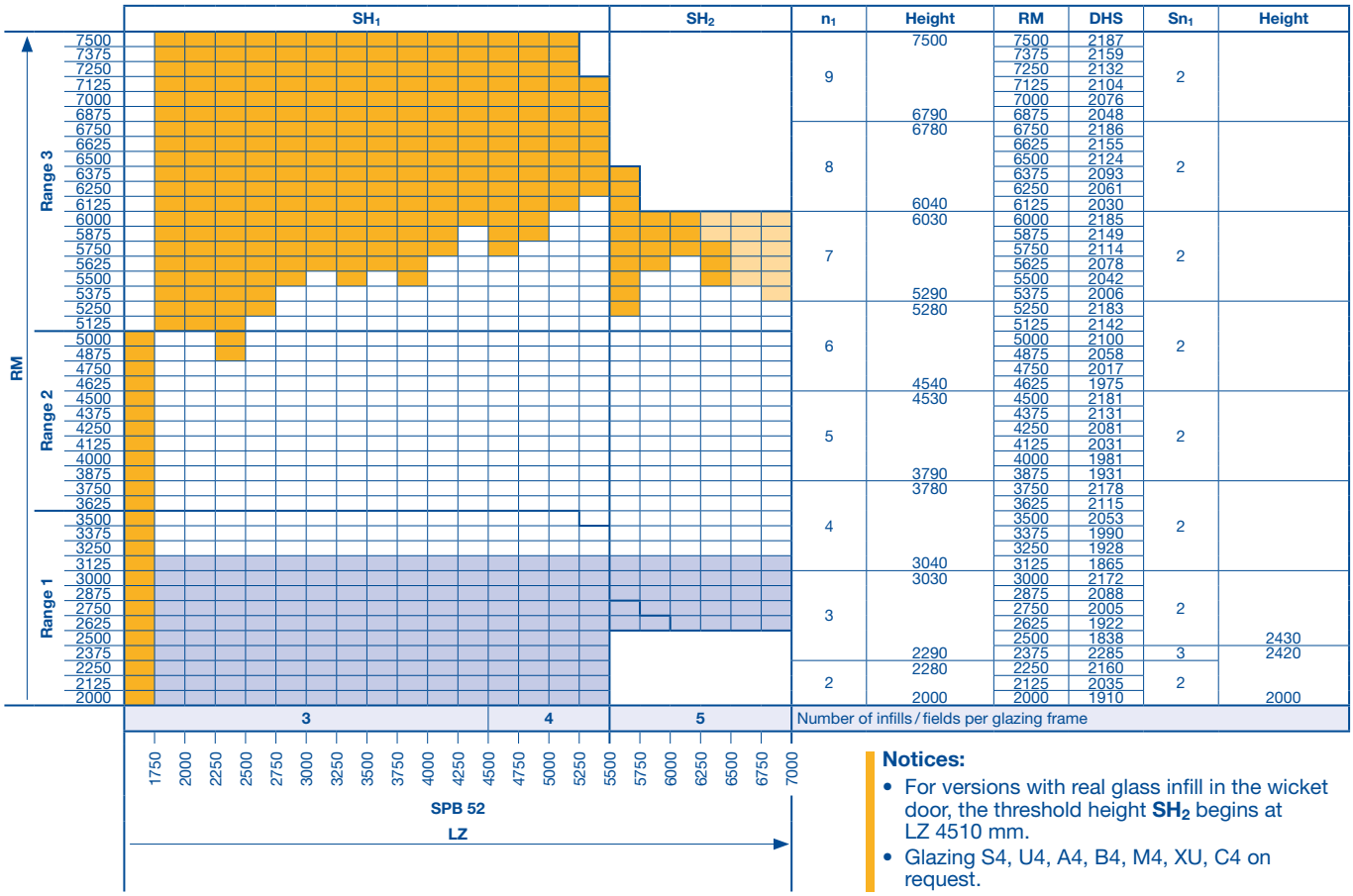

n_1	Height	RM	DHS	Sn_1	Height
9	7500	7500	2187	2	
		7375	2159		
		7250	2132		
		7125	2104		
		7000	2076		
	6790	6875	2048		
8	6780	6750	2186	2	
		6625	2155		
		6500	2124		
		6375	2093		
		6250	2061		
	6040	6125	2030		
7	6030	6000	2185	2	
		5875	2149		
		5750	2114		
		5625	2078		
		5500	2042		
	5290	5375	2006		
6	5280	5250	2183	2	
		5125	2142		
		5000	2100		
		4875	2058		
		4750	2017		
	4540	4625	1975		
5	4530	4500	2181	2	
		4375	2131		
		4250	2081		
		4125	2031		
		4000	1981		
	3790	3875	1931		
4	3780	3750	2178	2	
		3625	2115		
		3500	2053		
		3375	1990		
		3250	1928		
	3040	3125	1865		
3	3030	3000	2172	2	
		2875	2088		
		2750	2005		
		2625	1922		
		2500	1838		2430
	2290	2375	2285	3	2420
2	2280	2250	2160	2	
		2125	2035		
	2000	2000	1910		2000

Number of infills / fields per glazing frame

Notices:

- For versions with real glass infill in the wicket door, the threshold height **SH_2** begins at LZ 4510 mm.
- Glazing S4, U4, A4, B4, M4, XU, C4 on request.

On request: torsion spring shaft or direct drive operator

On request and only direct drive operator S140 with track application H

For note on trap guard, see page 5

Range change

DHS Wicket door clear passage height
DBS Wicket door clear passage width
DRH Lever height

LZ Clear frame dimensions **(from 1500)**
RM Grid height
SPB Rail width
SH_1 Threshold height **(220)**
SH_2 Threshold height **(317)**
n_1 Number of glazing frames
Sn_1 Number of glazing frames in the wicket door
TH Door section height

Sectional door APU 67 Thermo with wicket door and trip-free threshold

Glazed aluminium sectional door with thermal break

With steel bottom section, bottom section height 1500

Viewed from outside

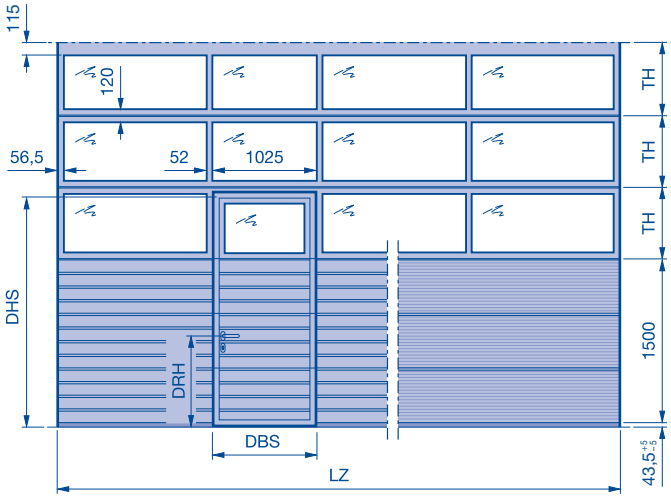

Lever height (DRH):

LZ ≤ 6000 = 1080,5

LZ > 6000 = 830,5

Wicket door clear passage width (DBS) = 905 mm**

Clear passage height of wicket door (DHS) = Sn_1 × TH + (bottom section height – 55*)

Sn_1 Number of frames in the wicket door

* Attention: If there is no frame above the wicket door, then – 100 instead of – 55.

** For a door width of 1750 - 1840 mm, the clear passage width is 798 mm.
For door widths below 1750 mm, the clear passage width (DBS) depends on the door width and is much smaller than standard dimensions.

Notice:

- When using a shaft operator (installation example 5), the door locking is always opposite the operator side.
- For a view of the matching appearance with doors without wicket doors see page 26 – 28.

Size range

The validity tables with the size range shown are based on the standard door type version (see product description). In case of deviations, the valid size ranges in the product configurator must be taken into account. Any door width in 10 mm increments possible.

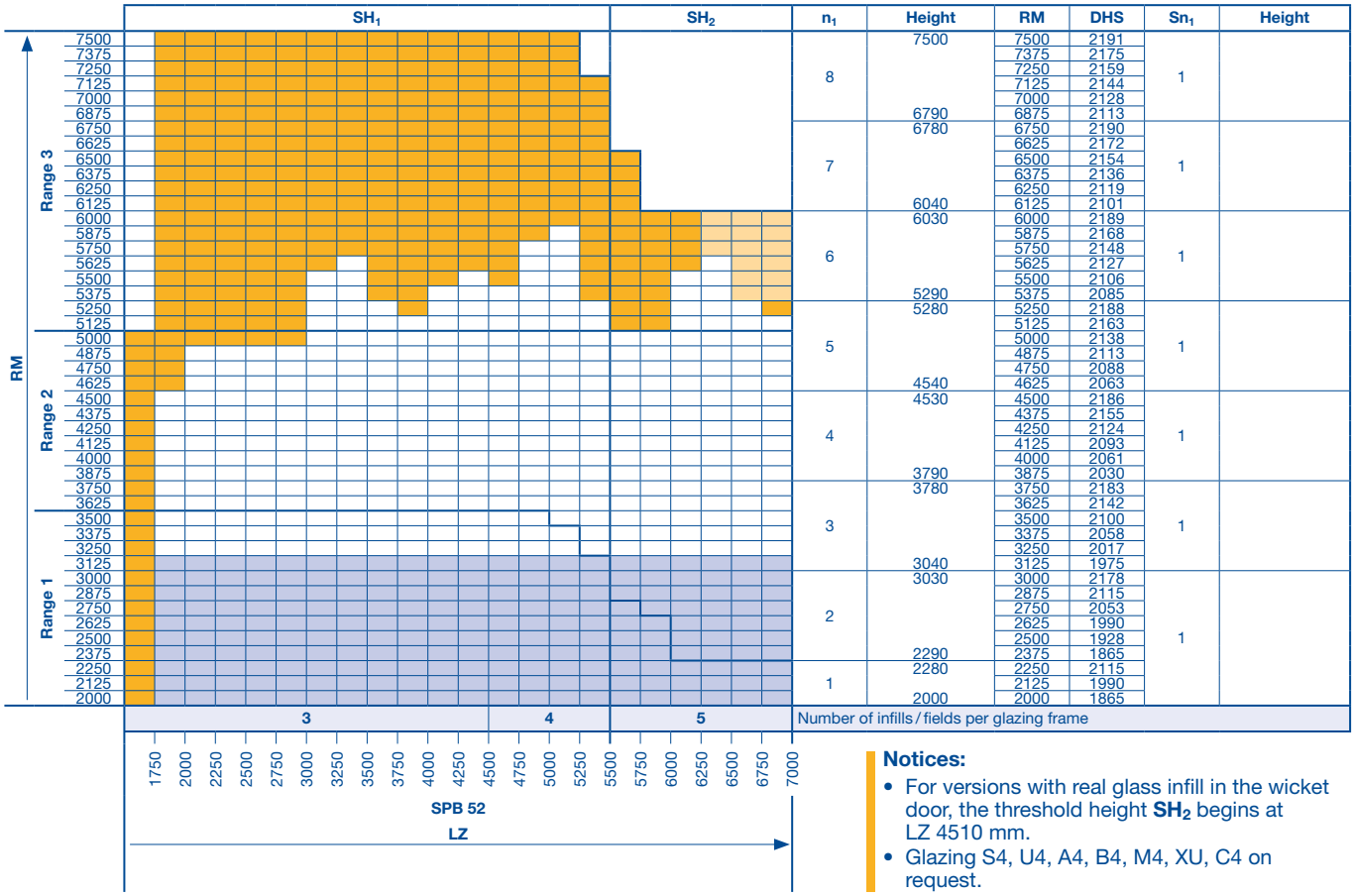

RM	n_1	Height	DHS	Sn_1
7500	8	7500	2191	1
7375			2175	
7250			2159	
7125			2144	
7000			2128	
6875		6790	2113	
6750	7	6780	2190	1
6625			2172	
6500			2154	
6375			2136	
6250			2119	
6125		6040	2101	
6000	6	6030	2189	1
5875			2168	
5750			2148	
5625			2127	
5500			2106	
5375		5290	2085	
5250	5	5280	2188	1
5125			2163	
5000			2138	
4875			2113	
4750			2088	
4625		4540	2063	
4500	4	4530	2186	1
4375			2155	
4250			2124	
4125			2093	
4000			2061	
3875		3790	2030	
3750	3	3780	2183	1
3625			2142	
3500			2100	
3375			2058	
3250			2017	
3125		3040	1975	
3000	2	3030	2178	1
2875			2115	
2750			2053	
2625			1990	
2500			1928	
2375		2290	1865	
2250	1	2280	2115	
2125			1990	
2000		2000	1865	

Notices:

- For versions with real glass infill in the wicket door, the threshold height **SH_2** begins at LZ 4510 mm.
- Glazing S4, U4, A4, B4, M4, XU, C4 on request.

On request: torsion spring shaft or direct drive operator

On request and only direct drive operator S140 with track application H

For note on trap guard, see page 5

Range change

DHS Wicket door clear passage height
DBS Wicket door clear passage width
DRH Lever height

LZ Clear frame dimensions **(from 1500)**
RM Grid height
SPB Rail width
SH_1 Threshold height **(rising from 5 to 10)**
SH_2 Threshold height **(approx. 13)**
n_1 Number of glazing frames
Sn_1 Number of glazing frames in the wicket door
TH Door section height

Sectional door APU 67 Thermo with wicket door and threshold rail

Glazed aluminium sectional door with thermal break

With steel bottom section, bottom section height 1500

Viewed from outside

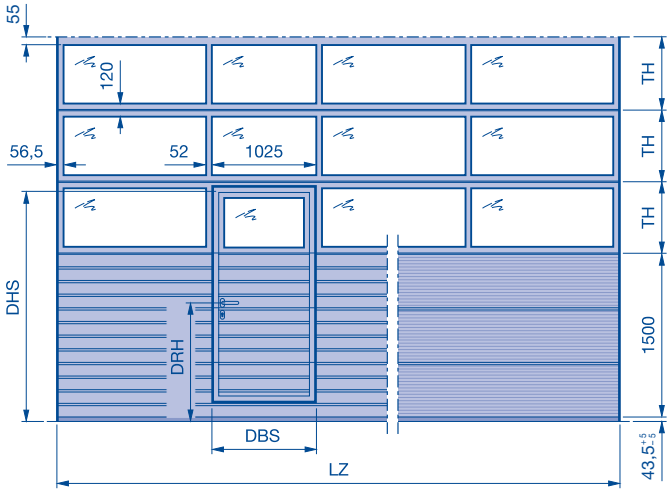

Lever height on request

Wicket door clear passage width (DBS) = 905 mm*

Wicket door passage height (DHS) = Sn_1 × TH + (bottom section height – 55)

Sn_1 Number of frames in the wicket door

* For a door width of 1750 - 1840 mm, the clear passage width is 798 mm.
For door widths below 1750 mm, the clear passage width (DBS) depends on the door width and is much smaller than standard dimensions.

Notice:

- When using a shaft operator (installation example 5), the door locking is always opposite the operator side.
- Bottom door section made of 375 / 500 mm section and 2 × 125 mm aluminium bottom profile for door widths > 5500 mm.
- For a view of the matching appearance with doors without wicket doors see page 26 – 28.

Size range

The validity tables with the size range shown are based on the standard door type version (see product description). In case of deviations, the valid size ranges in the product configurator must be taken into account. Any door width in 10 mm increments possible.

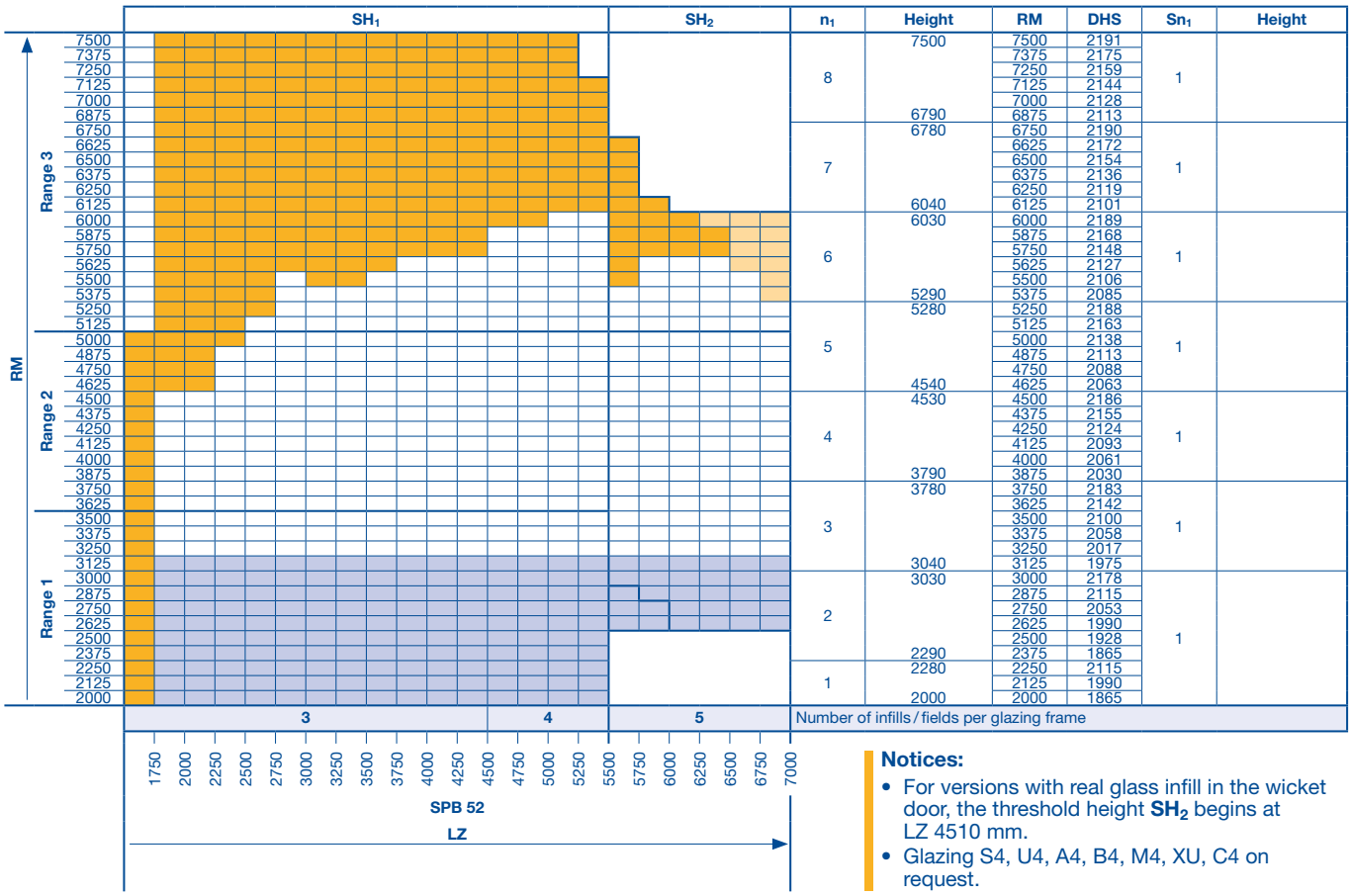

n_1	Height	RM	DHS	Sn_1	Height
8	7500	7500	2191	1	
		7375	2175		
		7250	2159		
		7125	2144		
		7000	2128		
	6790	6875	2113		
7	6780	6750	2190	1	
		6625	2172		
		6500	2154		
		6375	2136		
		6250	2119		
	6040	6125	2101		
6	6030	6000	2189	1	
		5875	2168		
		5750	2148		
		5625	2127		
		5500	2106		
	5290	5375	2085		
5	5280	5250	2188	1	
		5125	2163		
		5000	2138		
		4875	2113		
		4750	2088		
	4540	4625	2063		
4	4530	4500	2186	1	
		4375	2155		
		4250	2124		
		4125	2093		
		4000	2061		
	3790	3875	2030		
3	3780	3750	2183	1	
		3625	2142		
		3500	2100		
		3375	2058		
		3250	2017		
	3040	3125	1975		
2	3030	3000	2178	1	
		2875	2115		
		2750	2053		
		2625	1990		
		2500	1928		
	2290	2375	1865		
1	2280	2250	2115		
		2125	1990		
	2000	2000	1865		

Number of infills / fields per glazing frame

Notices:

- For versions with real glass infill in the wicket door, the threshold height **SH_2** begins at LZ 4510 mm.
- Glazing S4, U4, A4, B4, M4, XU, C4 on request.

On request: torsion spring shaft or direct drive operator

On request and only direct drive operator S140 with track application H

For note on trap guard, see page 5

Range change

DHS Wicket door clear passage height
DBS Wicket door clear passage width

DRH Lever height
LZ Clear frame dimensions **(from 1500)**
RM Grid height
SPB Rail width
SH_1 Threshold height **(220)**
SH_2 Threshold height **(317)**
n_1 Number of glazing frames
Sn_1 Number of glazing frames in the wicket door
TH Door section height

Sectional door ALR 67 Thermo

Glazed aluminium sectional door with thermal break

Viewed from outside

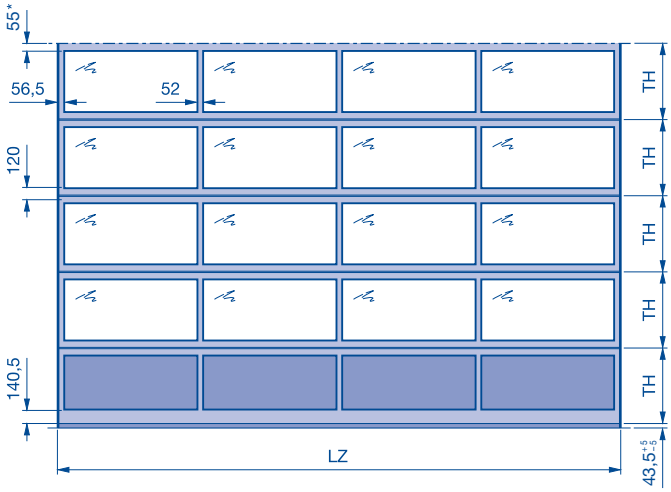

$$TH = \frac{\text{Door height} - 35}{\text{Number of door section frames}}$$

* On request 115 mm in order to match the appearance of a sectional door with wicket door with trip-free threshold with the same door height.

Notice:

- When using a shaft operator (installation example 5), the door locking is always opposite the operator side.
- For door widths from 5510 mm, diagonal struts are fitted into the bottom door section (not visible with closed infills).
- For a view of the matching appearance with doors with wicket doors see page 26 – 28.

Size range

The validity tables with the size range shown are based on the standard door type version (see product description). In case of deviations, the valid size ranges in the product configurator must be taken into account. Any door width in 10 mm increments possible.

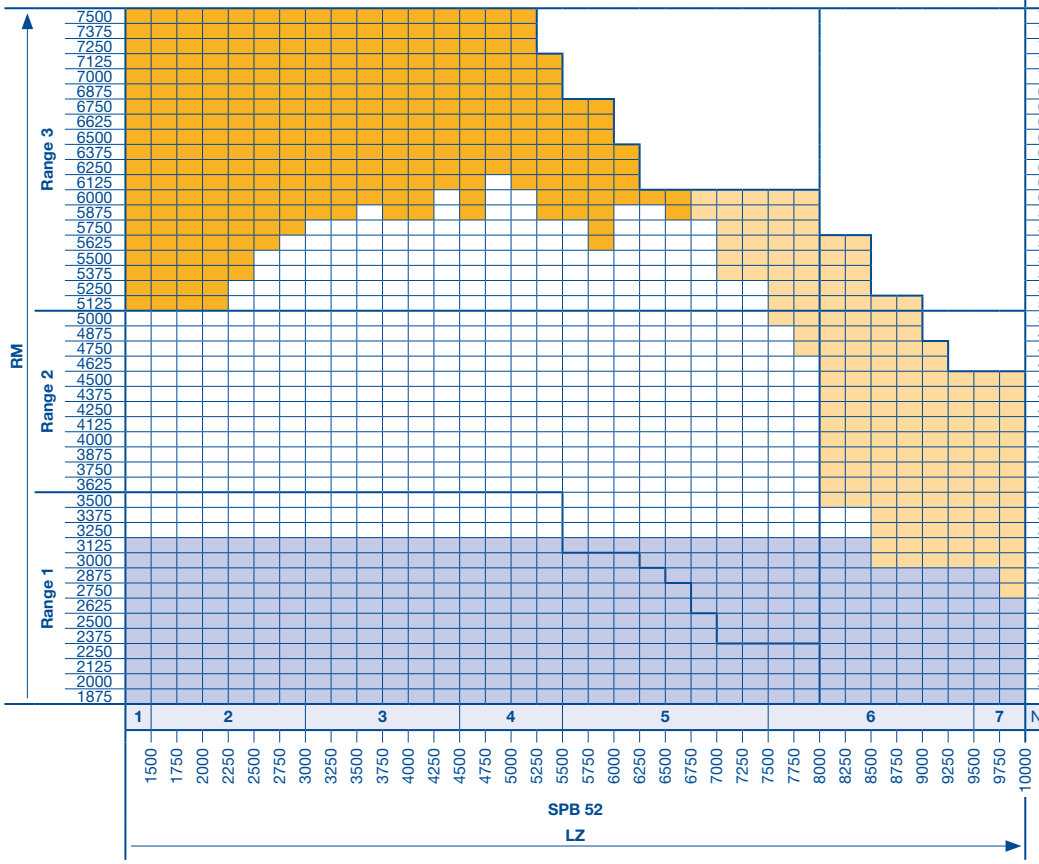

RM	LZ ≤ 8000 Sn1	LZ ≤ 8000 Height	LZ > 8000 n1	LZ > 8000 Height
7500	10	7500	14	7450 - 7500
7375			13	7440
7250				
7125				
7000				6880
6875		6790	12	6870
6750	9	6780		
6625				
6500				
6375				6310
6250			11	6300
6125		6040		
6000	8	6030		
5875				5740
5750			10	5730
5625				
5500				
5375		5290		
5250		5280		5170
5125	7		9	5160
5000				
4875				
4750				
4625		4540		4600
4500	6	4530	8	4590
4375				
4250				
4125				4030
4000			7	4020
3875		3790		
3750	5	3780		
3625				
3500				3460
3375			6	3450
3250				
3125		3040		
3000	4	3030		2890
2875			5	2880
2750				
2625				
2500				
2375		2290		2320
2250	3	2280	4	2310
2125				
2000				
1875		1875		

Number of infills / fields per glazing frame

1500 1750 2000 2250 2500 2750 3000 3250 3500 3750 4000 4250 4500 4750 5000 5250 5500 5750 6000 6250 6500 6750 7000 7250 7500 7750 8000 8250 8500 8750 9000 9250 9500 9750 10000

Notice:
Glazing S4, U4, A4, B4, M4, XU, C4 on request.

On request: torsion spring shaft or direct drive operator
On request and only direct drive operator S140 with track application H
For note on trap guard, see page 5
Range change
n_1 Number of glazing frames

Sn_1 Number of glazing frames in the wicket door
RM Grid height
LZ Clear frame dimensions **(from 1200)**
SPB Rail width
TH Door section height

Sectional door ALR 67 Thermo with wicket door and trip-free threshold

Glazed aluminium sectional door with thermal break

Viewed from outside

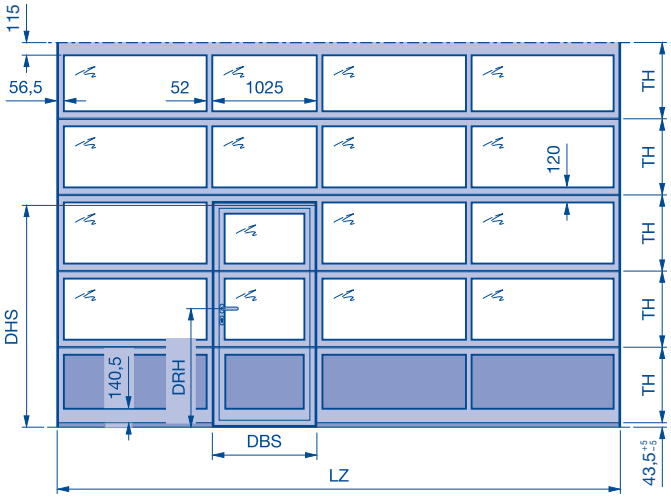

Lever height on request

Wicket door clear passage width (DBS) = 905 mm**

Clear passage height of wicket door (DHS) = $Sn_1 \times TH - 55$*

Sn_1 Number of frames in the wicket door

* Attention: If there is no frame above the wicket door, then – 100 instead of – 55.

** For a door width of 1750 - 1840 mm, the clear passage width is 833 mm. For door widths below 1750 mm, the clear passage width (DBS) depends on the door width and is much smaller than standard dimensions.

Notice:

- When using a shaft operator (installation example 5), the door locking is always opposite the operator side.
- For door widths from 5510 mm (from 4510 mm with real glass infill in the wicket door), diagonal struts are fitted into the bottom door section – not visible with closed infills.
- For a view of the matching appearance with doors without wicket doors see page 26 – 28.

Size range

The validity tables with the size range shown are based on the standard door type version (see product description). In case of deviations, the valid size ranges in the product configurator must be taken into account. Any door width in 10 mm increments possible.

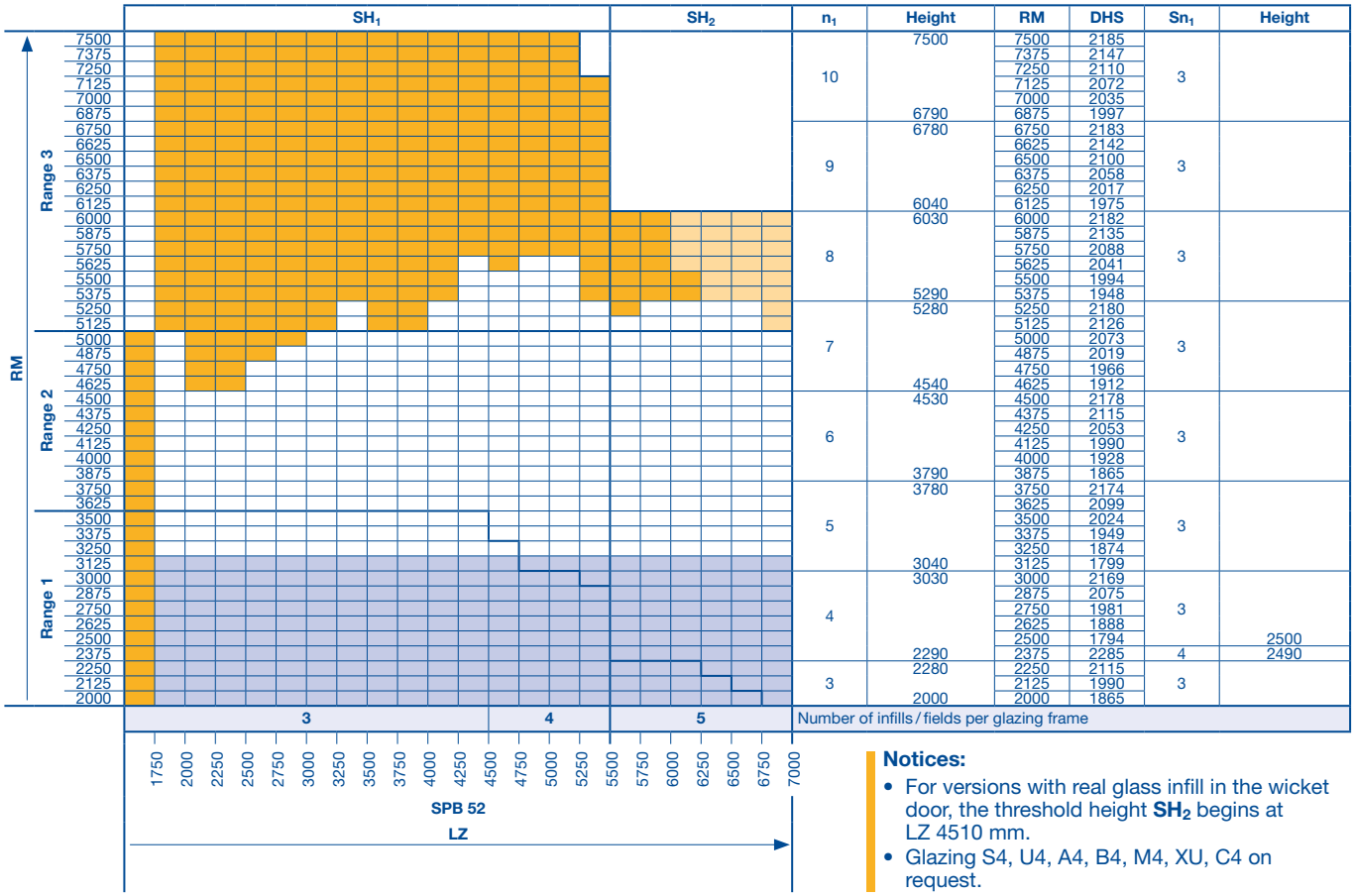

Notices:

- For versions with real glass infill in the wicket door, the threshold height **SH_2** begins at LZ 4510 mm.
- Glazing S4, U4, A4, B4, M4, XU, C4 on request.

On request: torsion spring shaft or direct drive operator

On request and only direct drive operator S140 with track application H

For note on trap guard, see page 5

Range change

DHS Wicket door clear passage height
DBS Wicket door clear passage width
DRH Lever height

LZ Clear frame dimensions **(from 1500)**
RM Grid height
SPB Rail width
SH_1 Threshold height **(rising from 5 to 10)**
SH_2 Threshold height **(approx. 13)**
n_1 Number of glazing frames
Sn_1 Number of glazing frames in the wicket door
TH Door section height

Sectional door ALR 67 Thermo with wicket door and threshold rail

Glazed aluminium sectional door with thermal break

Viewed from outside

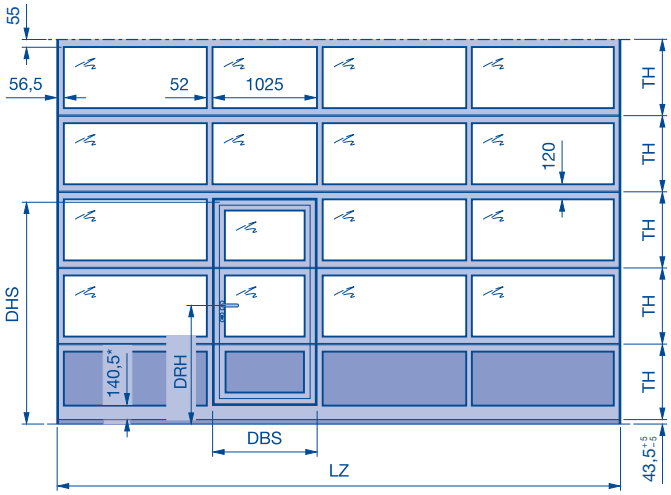

Lever height on request

Wicket door clear passage width (DBS) = 905 mm**

Clear passage height of wicket door (DHS) = $Sn_1 \times TH - 55$

Sn_1 Number of frames in the wicket door
* 265.5 with SH_2
** For a door width of 1750 - 1840 mm, the clear passage width is 798 mm.
For door widths below 1750 mm, the clear passage width (DBS) depends on the door width and is much smaller than standard dimensions.

Notice:

- When using a shaft operator (installation example 5), the door locking is always opposite the operator side.
- For a view of the matching appearance with doors without wicket doors see page 26 – 28.

Size range

The validity tables with the size range shown are based on the standard door type version (see product description). In case of deviations, the valid size ranges in the product configurator must be taken into account. Any door width in 10 mm increments possible.

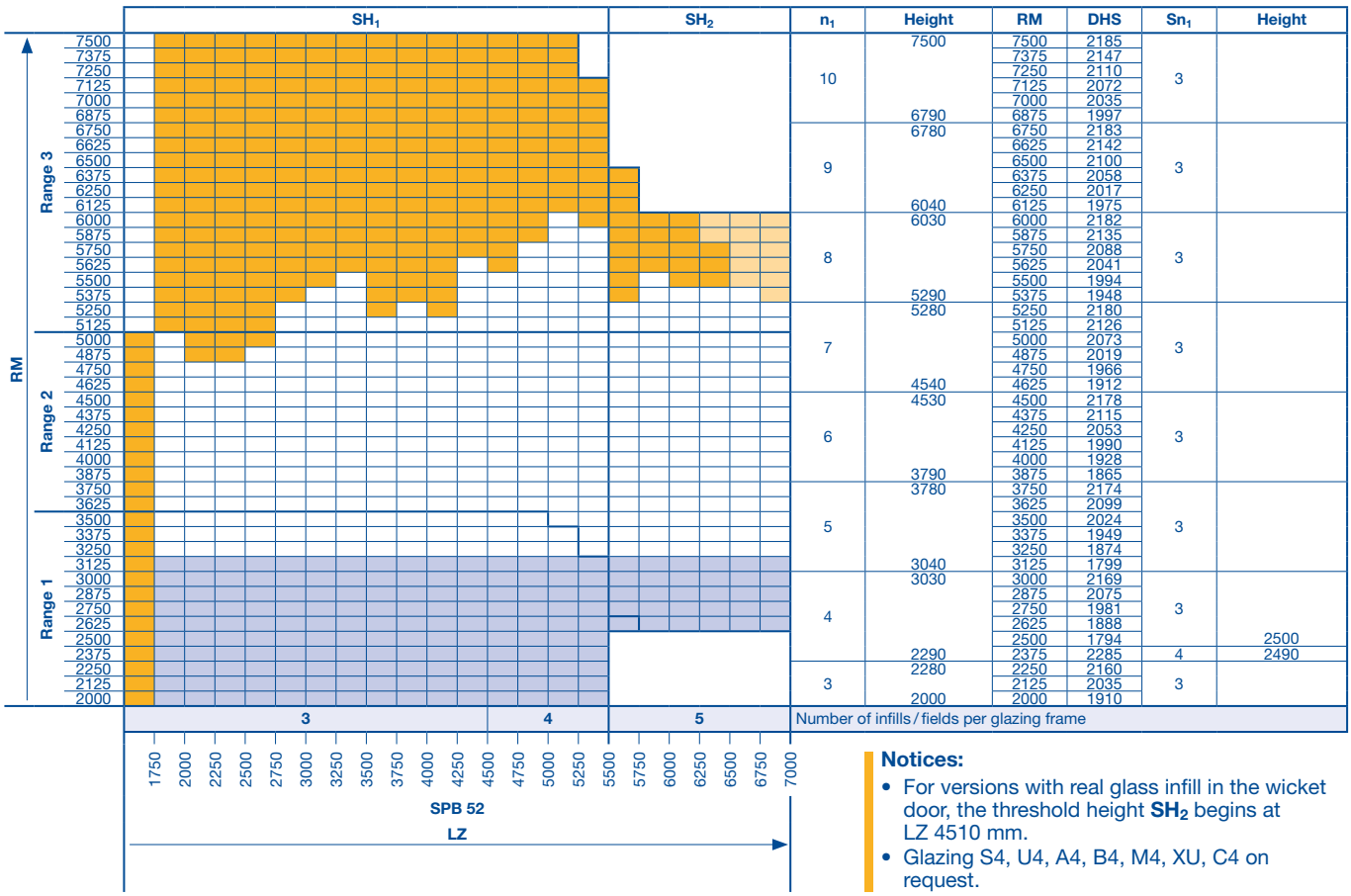

RM	Range	SH_1	SH_2	n_1	Height	RM	DHS	Sn_1	Height
7500	Range 3			10	7500	7500	2185	3	
7375						7375	2147		
7250						7250	2110		
7125						7125	2072		
7000						7000	2035		
6875					6790	6875	1997		
6750				9	6780	6750	2183	3	
6625						6625	2142		
6500						6500	2100		
6375						6375	2058		
6250						6250	2017		
6125					6040	6125	1975		
6000				8	6030	6000	2182	3	
5875						5875	2135		
5750						5750	2088		
5625						5625	2041		
5500						5500	1994		
5375					5290	5375	1948		
5250				7	5280	5250	2180	3	
5125						5125	2126		
5000	Range 2					5000	2073		
4875						4875	2019		
4750						4750	1966		
4625					4540	4625	1912		
4500				6	4530	4500	2178	3	
4375						4375	2115		
4250						4250	2053		
4125						4125	1990		
4000						4000	1928		
3875					3790	3875	1865		
3750				5	3780	3750	2174	3	
3625						3625	2099		
3500	Range 1					3500	2024		
3375						3375	1949		
3250						3250	1874		
3125					3040	3125	1799		
3000				4	3030	3000	2169	3	
2875						2875	2075		
2750						2750	1981		
2625						2625	1888		
2500						2500	1794		2500
2375					2290	2375	2285	4	2490
2250				3	2280	2250	2160	3	
2125						2125	2035		
2000					2000	2000	1910		
		3	4	5		Number of infills / fields per glazing frame			

1750 2000 2250 2500 2750 3000 3250 3500 3750 4000 4250 4500 4750 5000 5250 5500 5750 6000 6250 6500 6750 7000

SPB 52

LZ

Notices:

- For versions with real glass infill in the wicket door, the threshold height **SH_2** begins at LZ 4510 mm.
- Glazing S4, U4, A4, B4, M4, XU, C4 on request.

On request: torsion spring shaft or direct drive operator

On request and only direct drive operator S140 with track application H

For note on trap guard, see page 5

Range change

DHS Wicket door clear passage height
DBS Wicket door clear passage width
DRH Lever height

LZ Clear frame dimensions **(from 1500)**
RM Grid height
SPB Rail width
SH_1 Threshold height **(192)**
SH_2 Threshold height **(317)**
n_1 Number of glazing frames
Sn_1 Number of glazing frames in the wicket door
TH Door section height

Sectional door ALR 67 Thermo Glazing

Aluminium sectional door with extensive glazing with thermal break, real glass

Viewed from outside

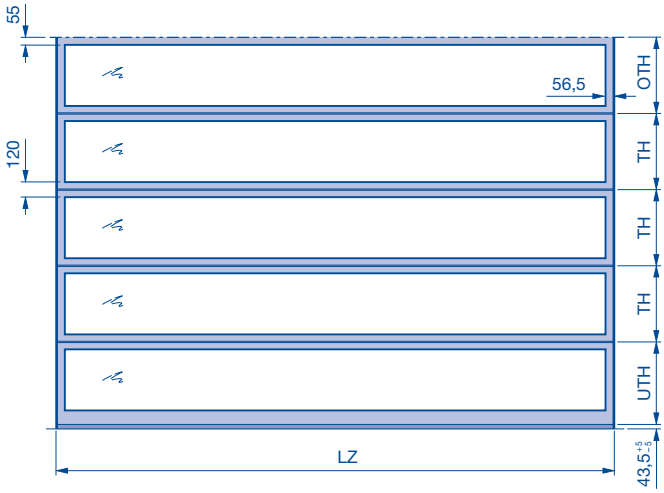

$$TH = \frac{\text{Door height} - 119}{\text{Number of door section frames}}$$

$UTH = TH + 84 \leq 785$
$OTH = TH + 35$

Notice:
- When using a shaft operator (installation example 5), the door locking is always opposite the operator side.
- All track applications on request.

Size range

The validity tables with the size range shown are based on the standard door type version (see product description). In case of deviations, the valid size ranges in the product configurator must be taken into account. Any door width in 10 mm increments possible.

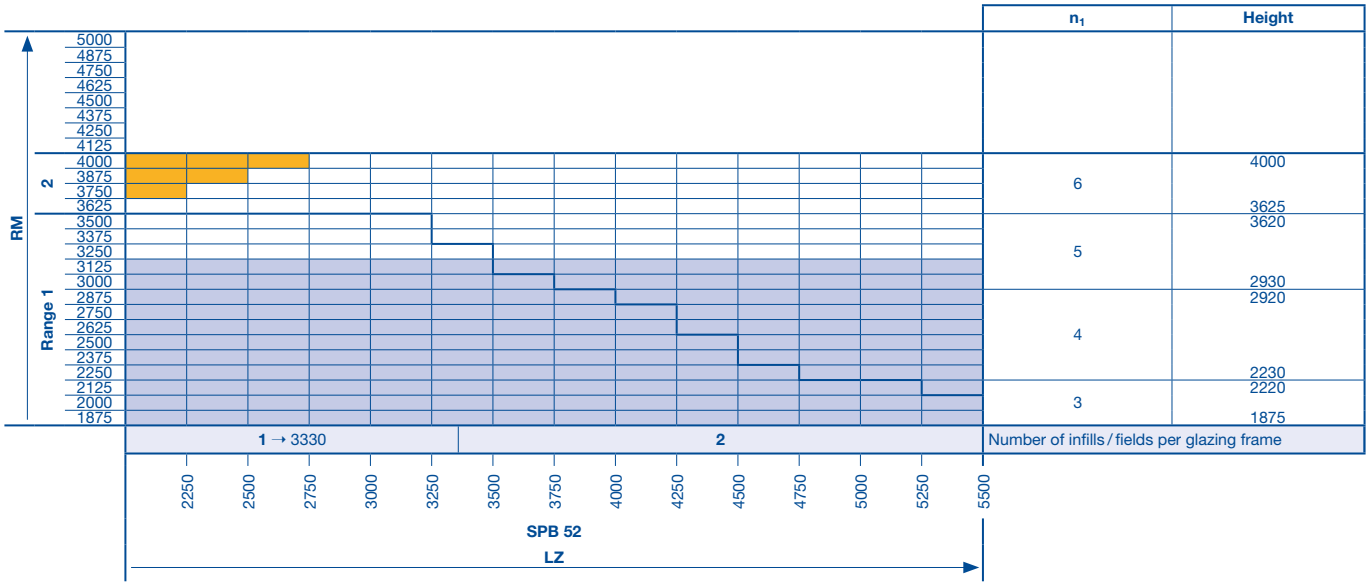

On request
For note on trap guard, see page 5
Range change

RM Grid height
LZ Clear frame dimensions **(from 2000)**

→ up to LZ
SPB Rail width
n_1 Number of glazing frames
UTH Bottom door section height
TH Door section height
OTH Upper door section height

Glazing and wicket door arrangements

Sectional doors with 3 infills, fields

Glazing arrangements – external view

Sectional door SPU 67 Thermo with wicket door with trip-free threshold

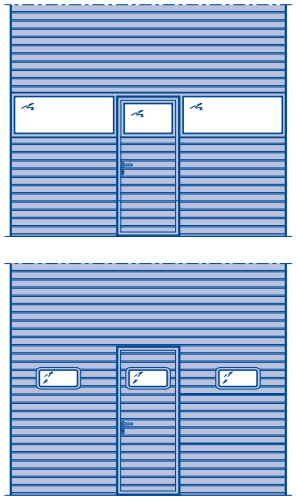

Sectional door SPU 67 Thermo, matching the wicket door versions

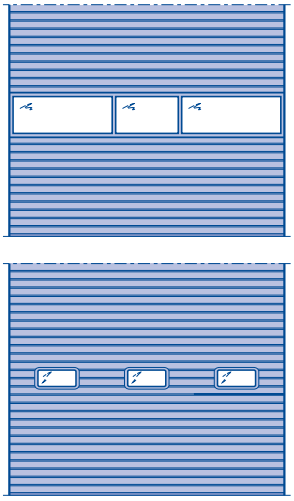

Sectional door SPU 67 Thermo with standard window division

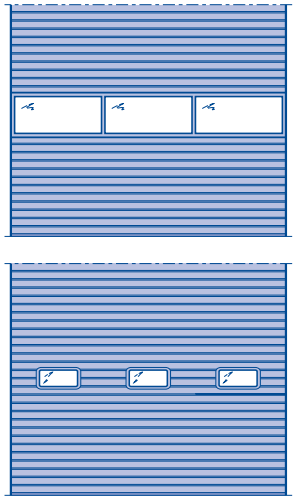

Sectional door APU 67 Thermo with wicket door with trip-free threshold

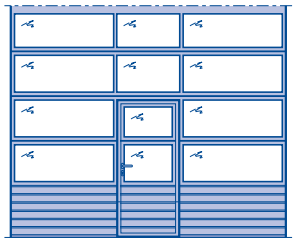

Sectional door APU 67 Thermo, matching the wicket door versions

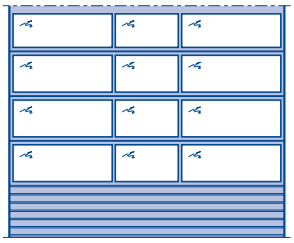

Sectional door APU 67 Thermo with standard window division

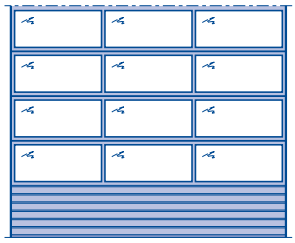

Sectional door ALR 67 Thermo with wicket door with trip-free threshold

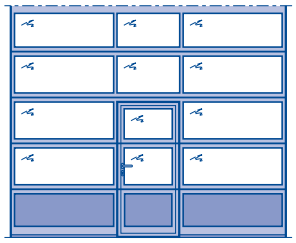

Sectional door ALR 67 Thermo, matching the wicket door versions

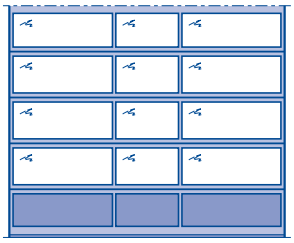

Sectional door ALR 67 Thermo with standard window division

Arrangement of the wicket door

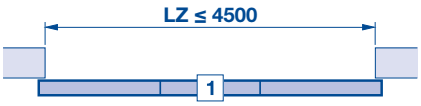

Notices:
- Wicket door clear passage width (DBS) = 905 mm.
- Wicket door only opening outwards.

Wicket door with short distance to outside door edge

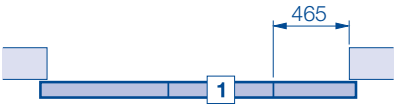

The short distance to the outside door edge is optionally possible on the left or right.

Notice:
- Not possible for doors with real glass.

Glazing and wicket door arrangements

Sectional doors with 4 infills, fields

Glazing arrangements – external view

Sectional door SPU 67 Thermo with wicket door with trip-free threshold

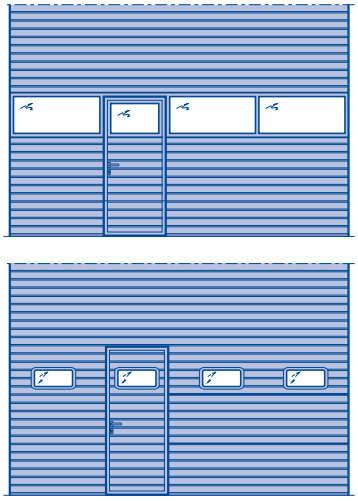

Sectional door SPU 67 Thermo, matching the wicket door versions

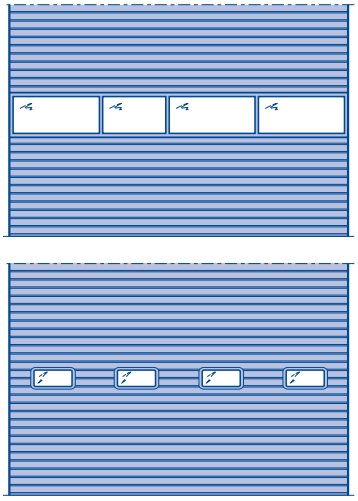

Sectional door SPU 67 Thermo with standard window division

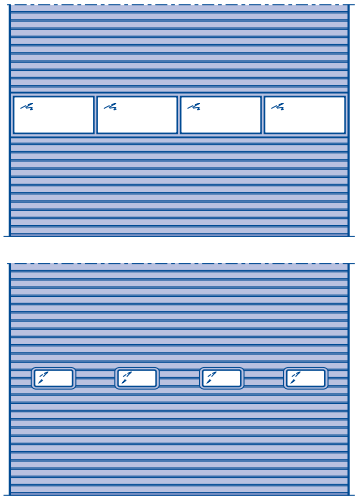

Sectional door APU 67 Thermo with wicket door with trip-free threshold

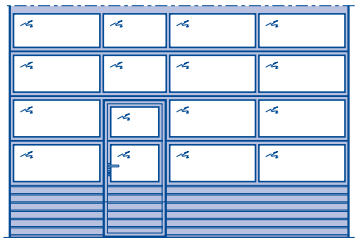

Sectional door APU 67 Thermo, matching the wicket door versions

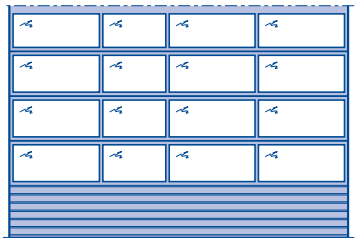

Sectional door APU 67 Thermo with standard window division

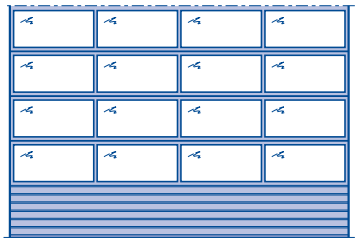

Sectional door ALR 67 Thermo with wicket door with trip-free threshold

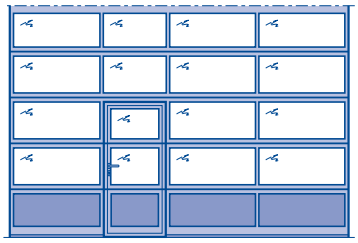

Sectional door ALR 67 Thermo, matching the wicket door versions

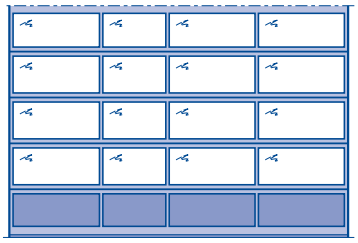

Sectional door ALR 67 Thermo with standard window division

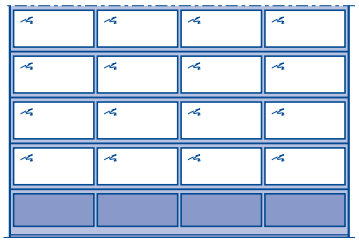

Arrangement of the wicket door

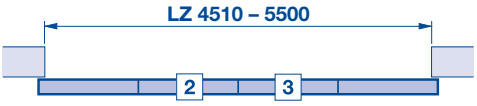

Notices:
- Wicket door clear passage width (DBS) = 905 mm.
- Wicket door only opening outwards.

Wicket door with short distance to outside door edge

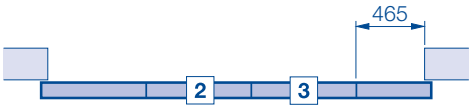

The short distance to the outside door edge is optionally possible on the left or right.

Notice:
- Not possible for doors with real glass.

Glazing and wicket door arrangements

Sectional doors with 5 infills, fields

Glazing arrangements – external view

Sectional door SPU 67 Thermo with wicket door with trip-free threshold

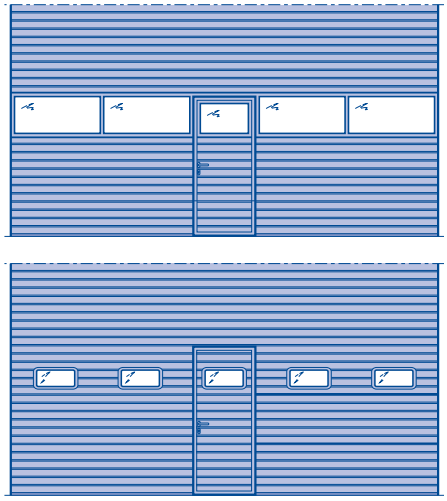

Sectional door SPU 67 Thermo, matching the wicket door versions

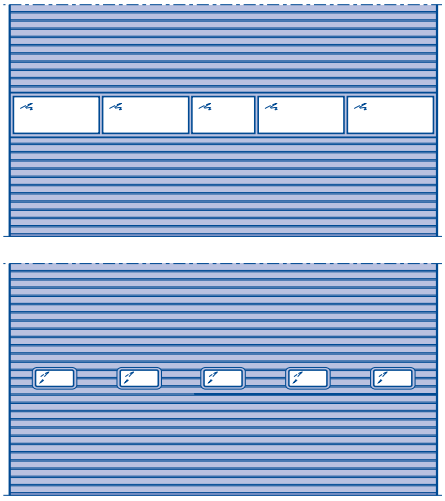

Sectional door SPU 67 Thermo with standard window division

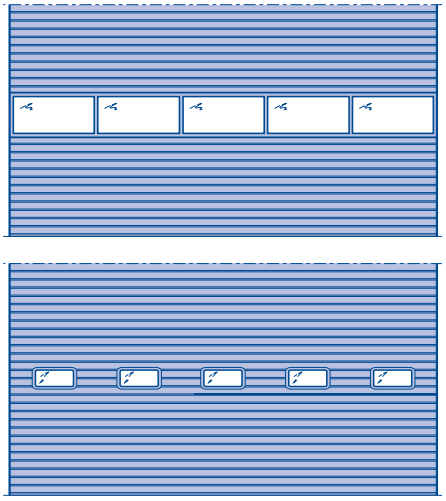

Sectional door APU 67 Thermo with wicket door with trip-free threshold

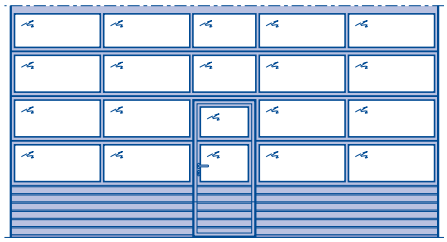

Sectional door APU 67 Thermo, matching the wicket door versions

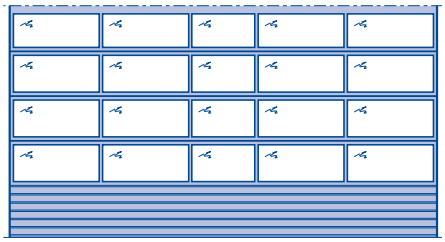

Sectional door APU 67 Thermo with standard window division

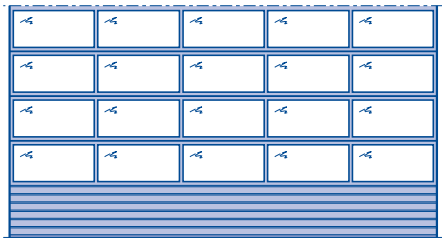

Sectional door ALR 67 Thermo with wicket door with trip-free threshold

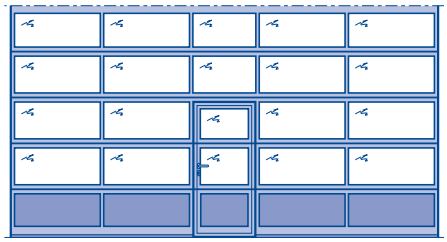

Sectional door ALR 67 Thermo, matching the wicket door versions

Sectional door ALR 67 Thermo with standard window division

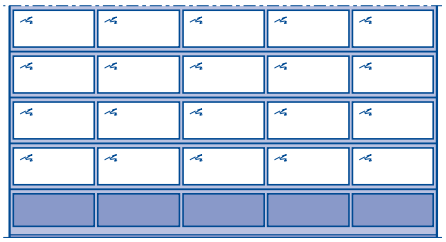

Arrangement of the wicket door

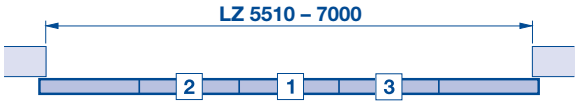

Notices:
- Wicket door clear passage width (DBS) = 905 mm.
- Wicket door only opening outwards.

Wicket door with short distance to outside door edge

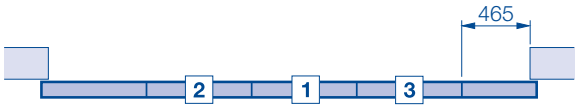

The short distance to the outside door edge is optionally possible on the left or right.

Notice:
- Not possible for doors with real glass.

Side door NT 80 Thermo

Possible handing options

Fitting in the opening
Fitting next to the garage door, opening inwards or outwards, RH or LH hinged

Fitting in the opening, opening inwards or outwards, RH or LH hinged

Fitting behind the opening
Only opening inwards, RH or LH hinged

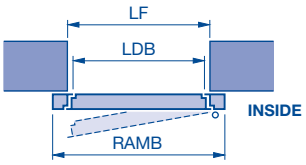

Structural opening	Ordering size Overall frame dimensions RAMB × RAMH
875 × 2000	855 × 1990
875 × 2125	855 × 2115
1000 × 2000	980 × 1990
1000 × 2125	980 × 2115
Size range: width: RAMB 770 to 1300, height: RAMH 1865 to 2525 **(indicate overall frame dimensions)** **Doors with multiple-point locking:** RAMH = ≥ 1920 mm	

Clear passage dimensions:

Opening angle	Width	Height
136°	RAMB – 164	RAMH – 70
90°	RAMB – 215	

LF Structural opening
RAMB Overall frame width
RAMH Overall frame height
LDB Clear passage width
LDH Clear passage height
LZ Clear frame dimension

Side door NT 80 Thermo

with S-ribbed Stucco-textured / L-ribbed Micrograin infills

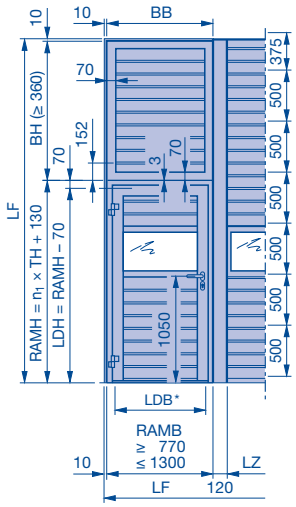

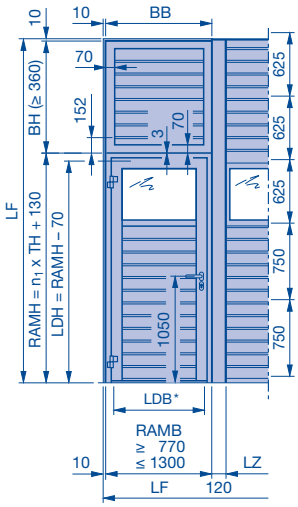

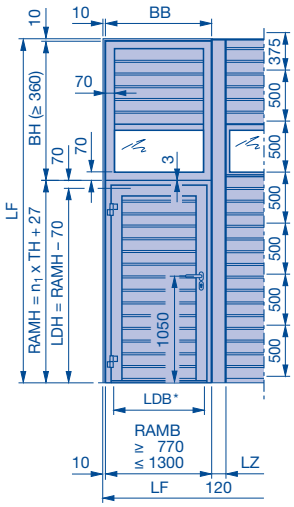

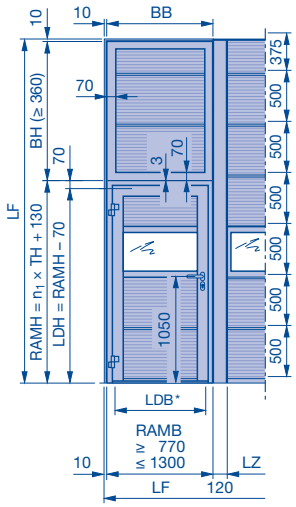

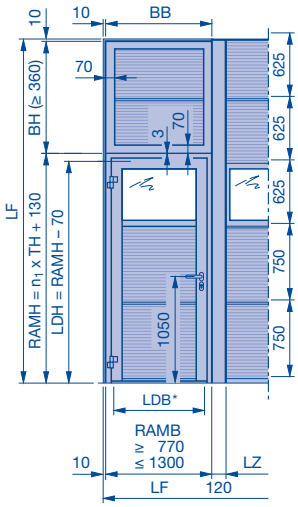

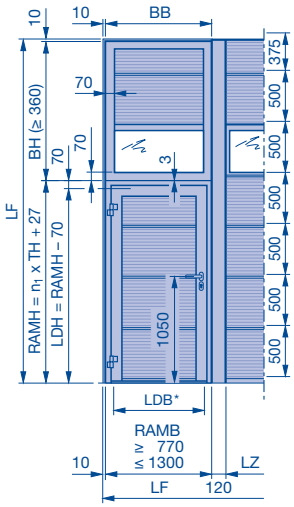

Notice:

- Compound glazing not possible with RC2 version.

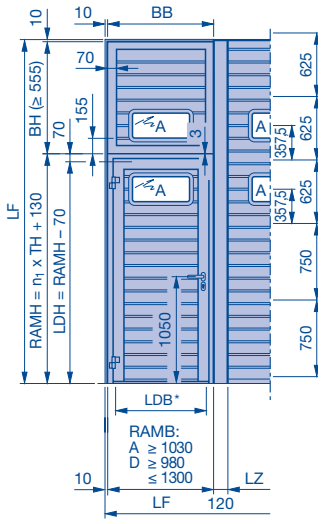

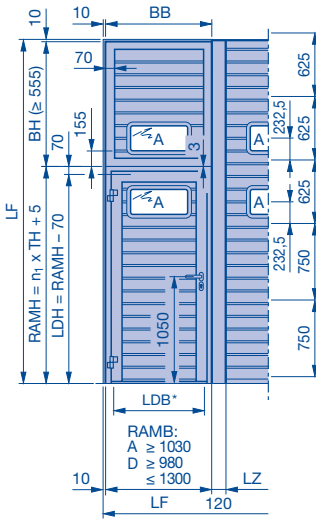

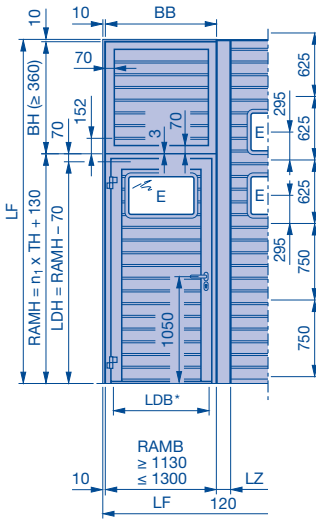

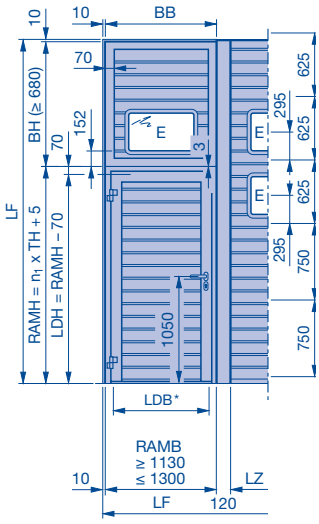

*	See page 29	**BH**	Panel height	**TH**	Door section height
LF	Structural opening	**PR**	Panel width	**SO**	Bottom section height
RAMB	Overall frame width	**LDB**	Clear passage width	**LZ**	Clear frame dimension
RAMH	Overall frame height	**LDH**	Clear passage height	**n_1**	Number of door sections / glazing frames

Side door NT 80 Thermo

with L-ribbed Micrograin infills

Compound glazing type A TH = 500

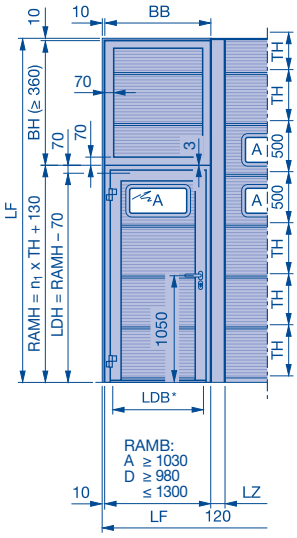

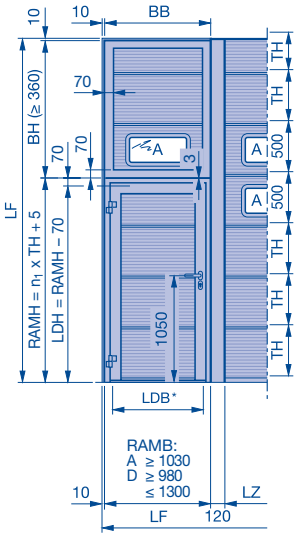

Compound glazing type A TH = 625 and 750

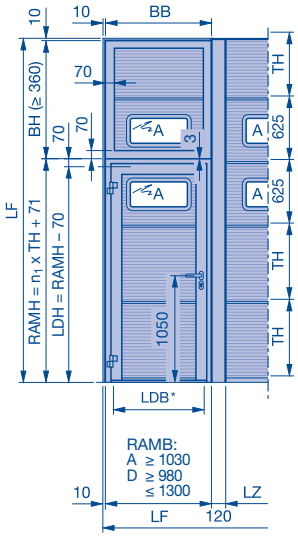

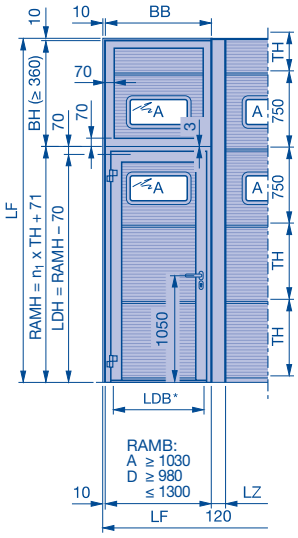

Compound glazing type A TH = 625 / 750 and 750 / 625

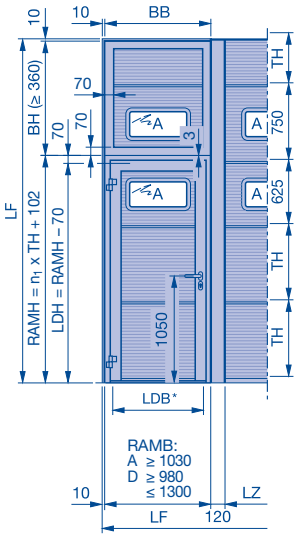

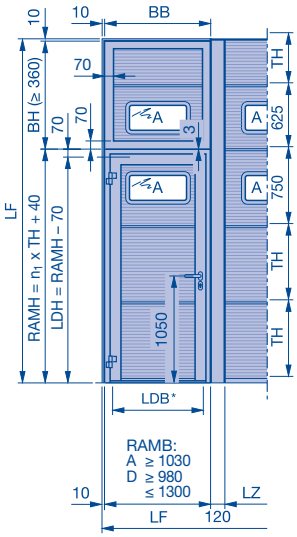

Compound glazing type E TH = 625

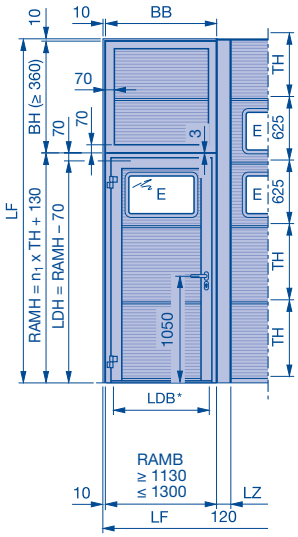

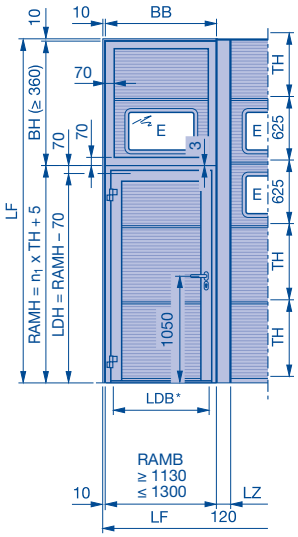

Compound glazing type E TH = 750

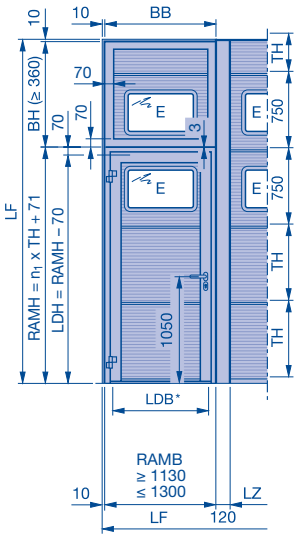

Notice:

- Compound glazing not possible with RC2 version.

(Legend see page 30)

Side door NT 80 Thermo

with S-ribbed Stucco-textured / L-ribbed Micrograin infills

Side door NT 80 Thermo matching door type APU 67 Thermo

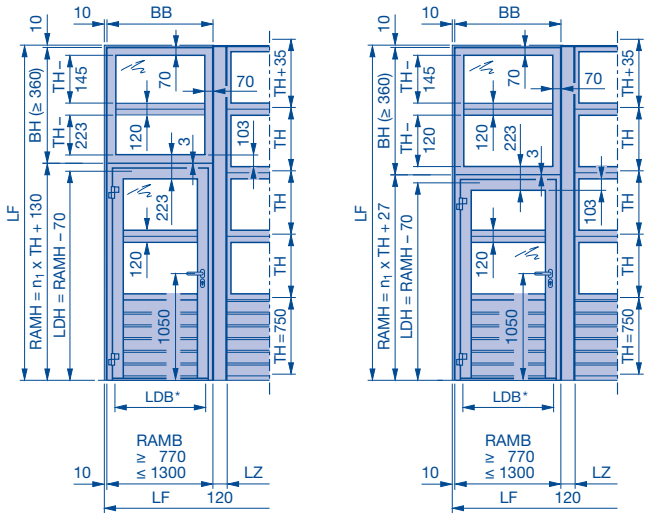

Side door NT 80 Thermo matching door type ALR 67 Thermo

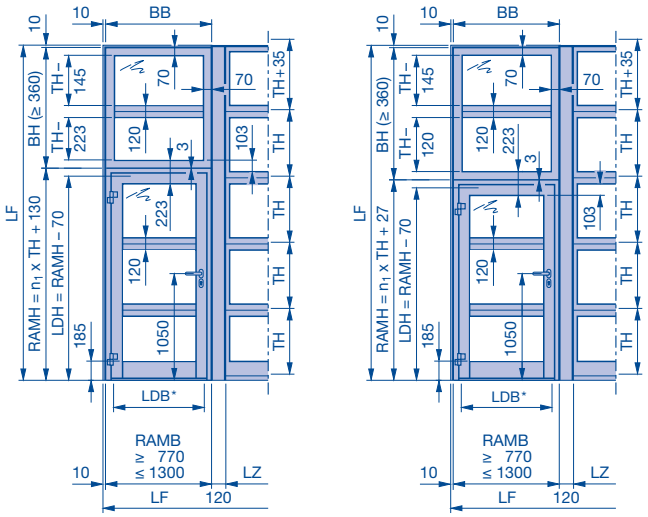

*	See page 29	**BH**	Panel height	**TH**	Door section height
LF	Structural opening	**PR**	Panel width	**SO**	Bottom section height
RAMB	Overall frame width	**LDB**	Clear passage width	**LZ**	Clear frame dimension
RAMH	Overall frame height	**LDH**	Clear passage height	**n_1**	Number of door sections / glazing frames

Side door NT 80 Thermo

Possible fitting options

Possible fitting options

SPU in the opening
No window section, no compound glazing

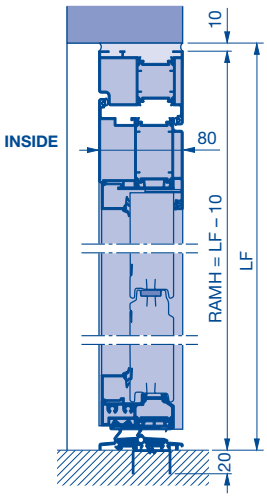

SPU behind the opening
No window section, no compound glazing

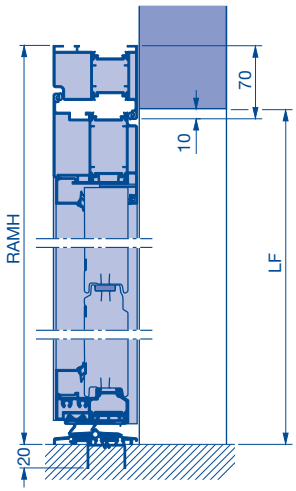

SPU, APU with fascia panel

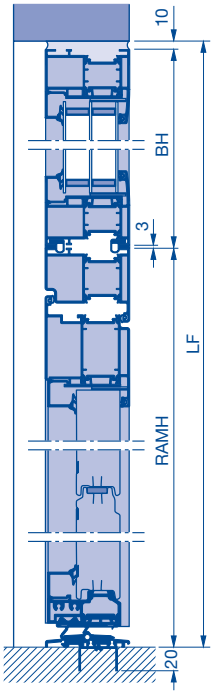

ALR with fascia panel

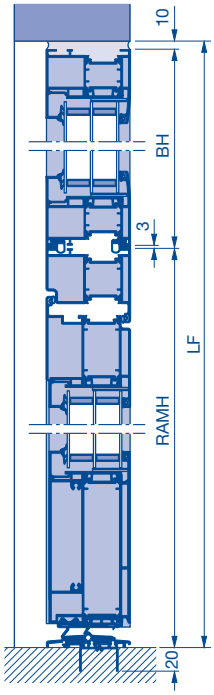

In the opening

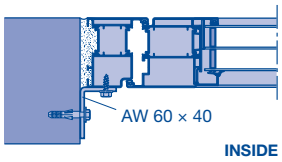

Plugs for metal frame

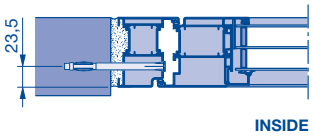

(Bottom illustration with 50 mm* extension profile for all-over insulation)

* Optionally with 25 mm

Tapping screw with countersunk head
B 6.3 × 80

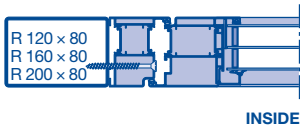

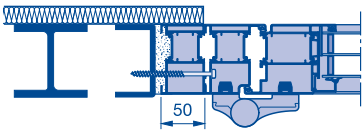

Behind the opening

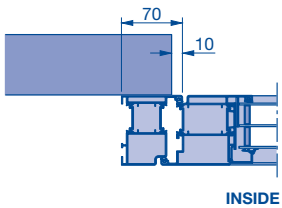

Notice:
Fitting with thermal break requires on-site preparations.

R	Box section	**BH**	Panel height
AW	Aluminium angle	**RAMH**	Overall frame height
spsz	Steel angle	**LF**	Structural opening

Side door NT 80 Thermo RC2

Possible fitting options

Possible fitting options

Notice:
The side door and panel must be fitted in accordance with DIN EN 1627.

SPU in the opening
No window section, no compound glazing

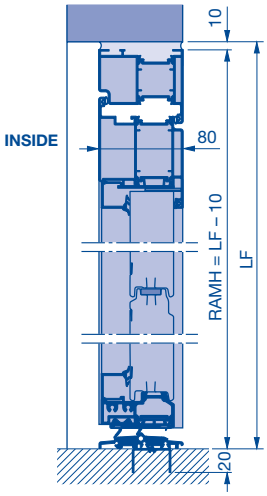

SPU behind the opening
No window section, no compound glazing

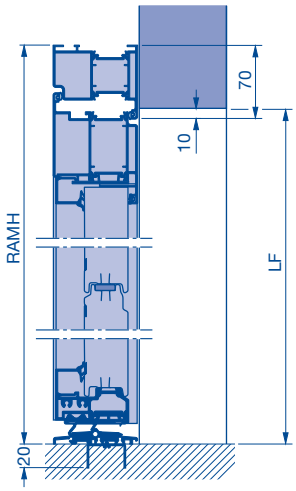

SPU, APU with fascia panel

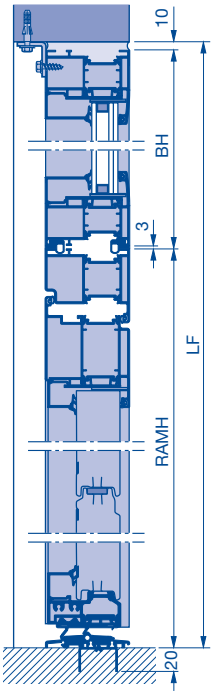

ALR with fascia panel

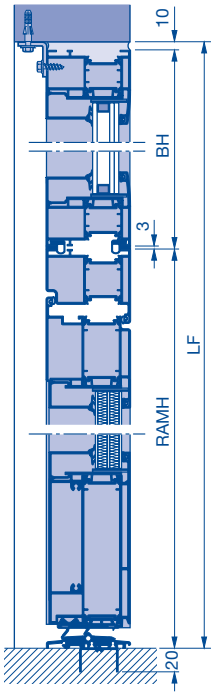

In the opening

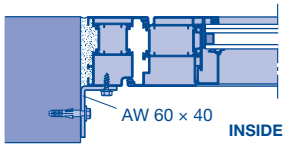

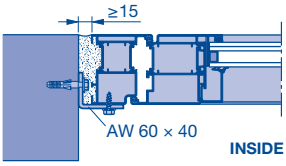

Plugs for metal frame

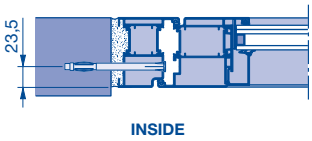

Tapping screw with countersunk head
B 6.3 × 80

Notice:
Only use plugs for metal frame and tapping screw with countersunk head when fitting the side door.

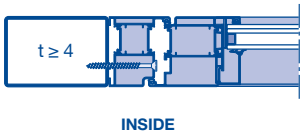

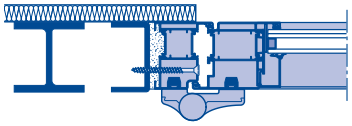

Behind the opening

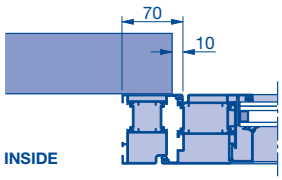

Notice:
Fitting with thermal break requires on-site preparations.

R	Box section	**BH**	Panel height	**LF**	Structural opening
AW	Aluminium angle	**RAMH**	Overall frame height		
spsz	Steel angle	**LDB**	Clear passage width		

Fixed elements

Possible fitting options and fitting examples

Possible fitting options

SPU 67 Thermo behind the opening
No window section, no compound glazing

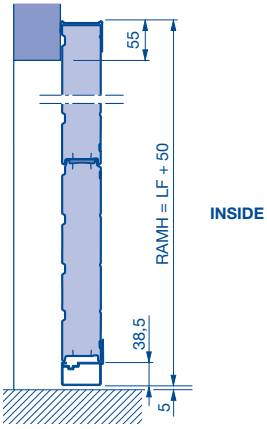

APU 67 Thermo behind the opening

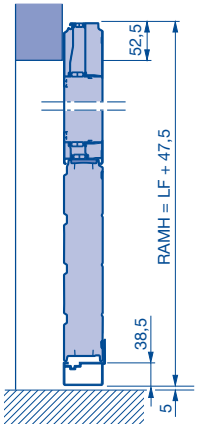

ALR 67 Thermo behind the opening

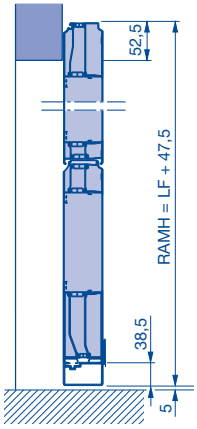

SPU 67 Thermo in the opening
No window section, no compound glazing

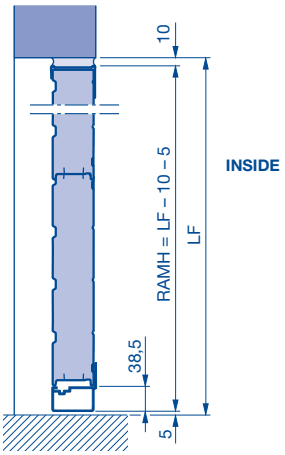

APU 67 Thermo in the opening

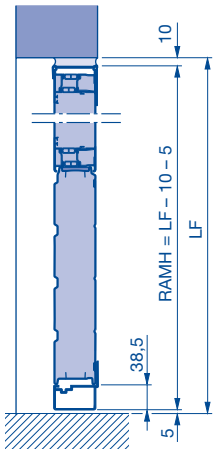

ALR 67 Thermo in the opening

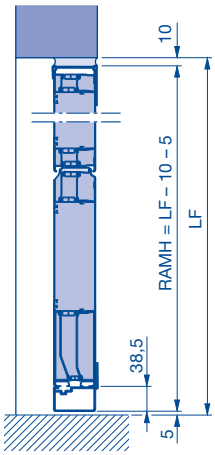

Fitting examples

Behind the opening

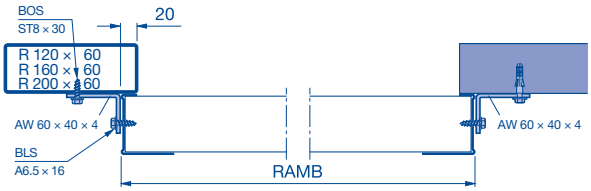

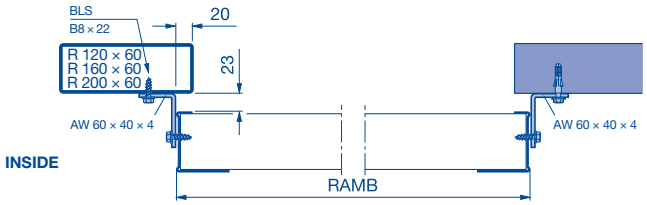

In the opening

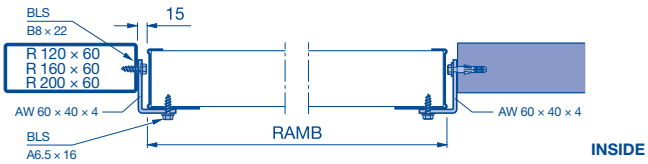

In front of the opening

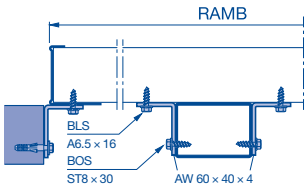

Notice:
Fitting with thermal break requires on-site preparations.

AW Aluminium angle
LF Structural opening
RAMB Overall frame width
RAMH Overall frame height

Clear passage

Series 60

Track application L with swivel mechanism

	without operator and without chain hoist	Chain hoist or WA 400 / 500	WA 300	ITO / SupraMatic
LZ ≤ 5500				
Without wicket door*	–	RM	RM - 30	–
Wicket door **with** threshold rail	–	RM - 50	RM - 80	–
Wicket door **without** threshold rail	–	RM - 65	RM - 95	–
LZ > 5500				
Without wicket door	–	RM – 50	RM - 80	–
Wicket door **with** threshold rail	–	RM - 100	RM - 130	–
Wicket door **without** threshold rail	–	RM - 135	RM - 165	–

* For ALR / ALR Thermo with real glass infill VG, E2 and G2 and ALR Vitraplan LZ > 3000;
ALR Glazing LZ > 3330 and ALR / ALR Thermo LZ > 5000, the calculation applies to a wicket door with threshold rail

Track application L without swivel mechanism

	without operator and without chain hoist	Chain hoist or WA 400 / 500	WA 300	ITO / SupraMatic
LZ ≤ 5500				
Without wicket door	RM - 325	RM - 200	RM - 230	RM - 50
Wicket door **with** threshold rail	RM - 375	RM - 220	RM - 250	RM - 100
Wicket door **without** threshold rail	RM - 440	RM - 265	RM - 315	RM - 135
LZ > 5500				
Without wicket door	RM - 375	RM - 250	RM - 280	RM - 50
Wicket door **with** threshold rail	RM - 375	RM - 270	RM - 300	RM - 100
Wicket door **without** threshold rail***	RM - 475	RM - 335	RM - 365	RM - 165

Track application LD with swivel mechanism

	without operator and without chain hoist	Chain hoist or WA 400 / 500		WA 300		ITO / SupraMatic
a°		**< 6°**	**6° – 10°**	**< 6°**	**6° – 10°**	
LZ ≤ 5500						
Without wicket door	–	RM		30		–
Wicket door **with** threshold rail	–	50	30	80	60	–
Wicket door **without** threshold rail	–	65		95		–
LZ > 5500						
Without wicket door	–	50		80		–
Wicket door **with** threshold rail	–	100	80	130	110	–
Wicket door **without** threshold rail	–	135		195		–

Track application LD without swivel mechanism

	without operator and without chain hoist	Chain hoist or WA 400 / 500		WA 300		ITO / SupraMatic
a°		**2° – 16°**	**> 16° – 30°**	**2° – 16°**	**> 16° – 30°**	
LZ ≤ 5500						
Without wicket door	RM - 325	RM – 200 + (a° × 5.3)	RM – 165 + (a° × 3.2)	RM – 230 + (a° × 5.3)	RM – 195 + (a° × 3.2)	RM - 50
Wicket door **with** threshold rail	RM - 375	RM – 220 + (a° × 5.3)	RM – 185 + (a° × 3.2)	RM – 250 + (a° × 5.3)	RM – 215 + (a° × 3.2)	RM - 100
Wicket door **without** threshold rail	RM - 440	RM – 265 + (a° × 5.3)	RM – 235 + (a° × 3.2)	RM – 315 + (a° × 5.3)	RM – 280 + (a° × 3.2)	RM - 135
LZ > 5500						
Without wicket door	RM - 375	RM – 250 + (a° × 5.3)	RM – 215 + (a° × 3.2)	RM – 280 + (a° × 5.3)	RM – 245 + (a° × 3.2)	RM - 50
Wicket door **with** threshold rail	RM - 375	RM – 270 + (a° × 5.3)	RM – 235 + (a° × 3.2)	RM – 300 + (a° × 5.3)	RM – 265 + (a° × 3.2)	RM - 100
Wicket door **without** threshold rail***	RM - 475	RM – 335 + (a° × 5.3)	RM – 300 + (a° × 3.2)	RM – 365 + (a° × 5.3)	RM – 330 + (a° × 3.2)	RM - 165

Track applications N / NA / ND / NS / NK

	without operator and without chain hoist	Chain hoist or WA 400 / 500	WA 300	ITO / SupraMatic**
LZ ≤ 5500				
Without wicket door	RM – 100	RM	RM - 30	RM
Wicket door **with** threshold rail	RM - 120	RM - 20	RM - 50	RM - 20
Wicket door **without** threshold rail	RM - 165	RM - 65	RM - 95	RM - 65
LZ > 5500				
Without wicket door	RM - 150	RM – 50	RM - 80	RM – 50
Wicket door **with** threshold rail	RM - 170	RM - 70	RM - 100	RM - 70
Wicket door **without** threshold rail	RM - 185	RM - 135	RM - 165	RM - 135
LZ > 8000				
Without wicket door	RM – 100	RM – 100	–	–

** Track applications NS and NK not possible.
*** For versions with real glass infill LZ > 4500

– Not possible
a° Inclination

LZ Clear frame dimension
RM Grid height

Track application: N

Normal track application

Detailed technical data can be found in the product configurator.

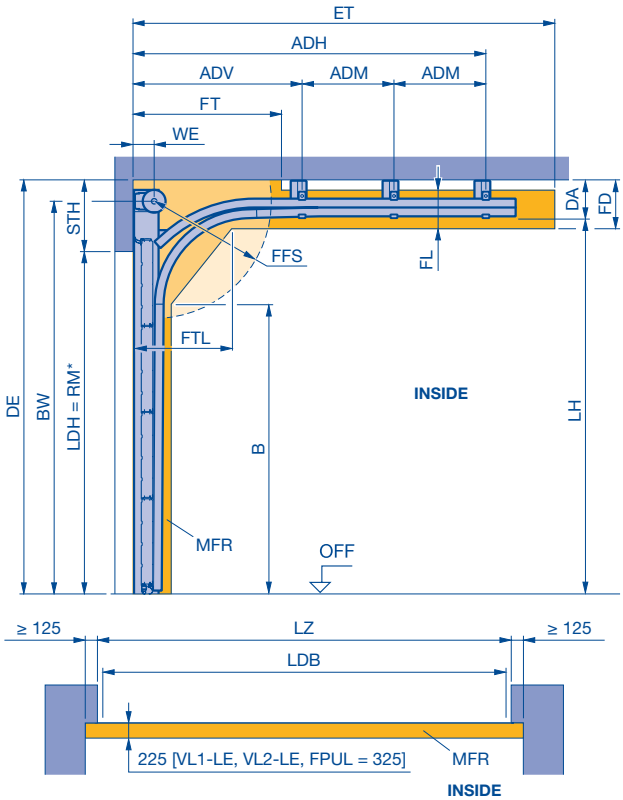

ADH Distance to rear ceiling anchor
ADM Distance to central ceiling anchor
ADV Distance to front ceiling anchor
B Start of double radius
BW Position of shaft support
DA Min. distance to ceiling
DAL Anchor length
DE Min. ceiling height
ET Min. distance back
FD Min. ceiling clearance
FFS Spring compression clearance
FL Track clearance
FPUL Spring buffers below the track
FT Clearance for door operation
FTL Clearance door section in the double radius
LDB Clear passage width with ThermoFrame (see page 62)
LDH Clear passage height
LH Track height
LZ Clear frame dimension
MFR Space for fitting the door
OFF Finished floor level (FFL)
RM Grid height
STH Min. headroom
WE Shaft centre from lintel

Door weights for roof loads:

SPU 67 Thermo	= 450 N/m²
APU 67 Thermo / ALR 67 Thermo	= 500 N/m²
ALR 67 Thermo Glazing	= 600 N/m²

Observe the min. sideroom, see page 62.

Notices:

- Observe the permissible size ranges of the door types on pages 9 – 14 and 17 – 25 under all circumstances!
- The clearance required for fitting the door must be free of supply lines, heater fans, etc.
- If using the spring buffer below the track, the clear height under the track in the area of the spring buffer is reduced by 70 mm.
- For version with wicket door, manually operated: chain hoist recommended!

* Notice:

Observe clear passage height LDH, see page 36.

	STH	WE	DA	BW	FT
N 1	425	140	205	RM + 345	2 × WE
N 2	475	160	253	RM + 370	
N 3	585	180	363	RM + 450	
with double spring shaft	795		563	RM + 450	

B	DE	FFS	FD	FL	FTL	LH
RM – 295	STH + RM	Min. 90° (745)	DA + 65	250	695	RM + 222

	ET***	
N 1 / N 2	RM + 415	Manual operation with short spring buffer
	RM + 685	Shaft operator with long spring buffer
N 3	RM + 685	For manual operation and shaft operator with long spring buffer

*** Simplified calculation

Min. headroom

Track size	Headroom	Track size	Headroom	Track size	Headroom
N 1, NS 1, NK 1	425	GS 1, GK 1	567	V 6	RM + 560
N 2, NS 2, NK 2	475	GS 1, GK 2	617	V 7	RM + 600
N 3	585	L 1, LD 1, L 2, LD 2	250	V 9	RM + 695
NA 1	435	H 4, HD 4	780	VA 6	RM + 570
NA 2	485	H 5, HD 5	840	VS 6, VS 7	**
ND 1	445	H 8, HD 8	880	VS 9	**
ND 2	475	HA 4	790	VU 6	RM + 310
ND 3	585	HU 4, HU 5, HU 8, RD 4, RD 5, RD 8	1775	VU 7	RM + 310
ND 6	525	HS 4, HK 4	805	VU 9	RM + 310
ND 7	545	HS 5, HK 5	835	WS 6, WS 7,WS 9	**
NH 1, GD 1	579	HS 8, HK 8	875		
NH 2, GD 2	644	RS 4, RK 4, RS 5, RK 5	1477		
NH 3	719				Dimensions in mm

** Dimensions can be found in the product configurator.

Track application: NA

Normal track application
with high-mounted torsion spring shaft

Detailed technical data can be found in the product configurator.

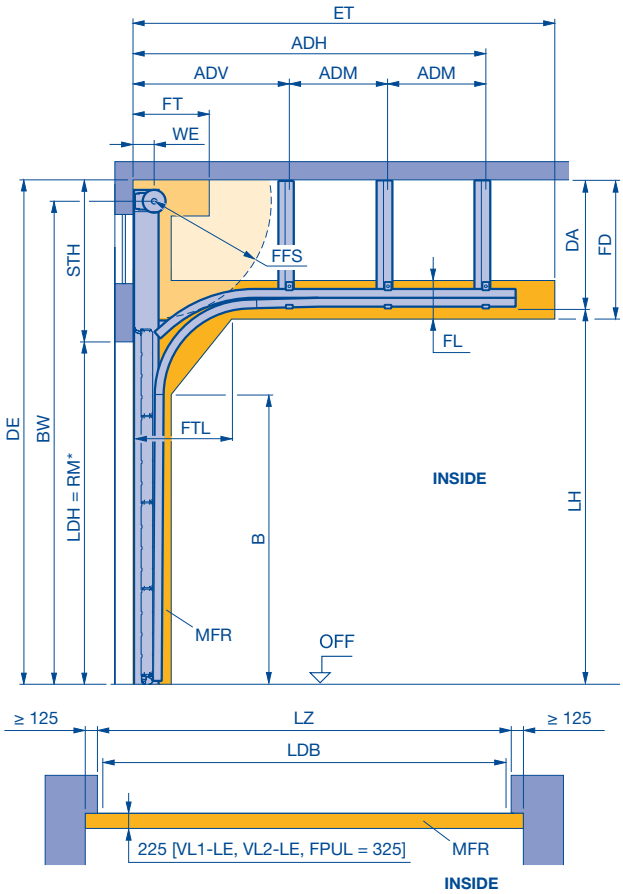

ADH	Distance to rear ceiling anchor
ADM	Distance to central ceiling anchor
ADV	Distance to front ceiling anchor
B	Start of double radius
BW	Position of shaft support
DA	Min. distance to ceiling (depends on order)
DE	Ceiling height (depends on order)
ET	Min. distance back
FD	Ceiling clearance
FFS	Spring compression clearance
FL	Track clearance
FPUL	Spring buffers below the track
FT	Clearance for door operation
FTL	Clearance door section in the double radius
LDB	Clear passage width with ThermoFrame (see page 62)
LDH	Clear passage height
LH	Track height
LZ	Clear frame dimension
MFR	Space for fitting the door
OFF	Finished floor level (FFL)
RM	Grid height
STH	Max. headroom (depends on order)
WE	Shaft centre from lintel

Door weights for roof loads:

SPU 67 Thermo	= 450 N/m²
APU 67 Thermo / ALR 67 Thermo	= 500 N/m²
ALR 67 Thermo Glazing	= 600 N/m²

Observe the min. sideroom, see page 62.

Notices:

- Observe the permissible size ranges of the door types on pages 9 – 14 and 17 – 25 under all circumstances!
- The clearance required for fitting the door must be free of supply lines, heater fans, etc.
- If using the spring buffer below the track, the clear height under the track in the area of the spring buffer is reduced by 70 mm.

* Notice:

Observe clear passage height LDH, see page 36.

	STH	WE	DA	Min. BW	Max. BW
NA 1	435	140	(BW + 80) – (RM + 222)	RM + 355	7820, DE – 80
NA 2	485	160	(BW + 105) – (RM + 222)	RM + 380	7995, DE – 105

FT	DE	B	FFS
2 × WE	STH + RM	RM – 295	Min. 90° (745)

FD	FL	FTL	LH
DA + 65	250	695	RM + 222

ET**		
NA 1 / NA 2	RM + 415	Manual operation with short spring buffer
	RM + 685	Shaft operator with long spring buffer

** Simplified calculation

Track application: ND

Normal track application

With inclination up to max. 46

Detailed technical data can be found in the product configurator.

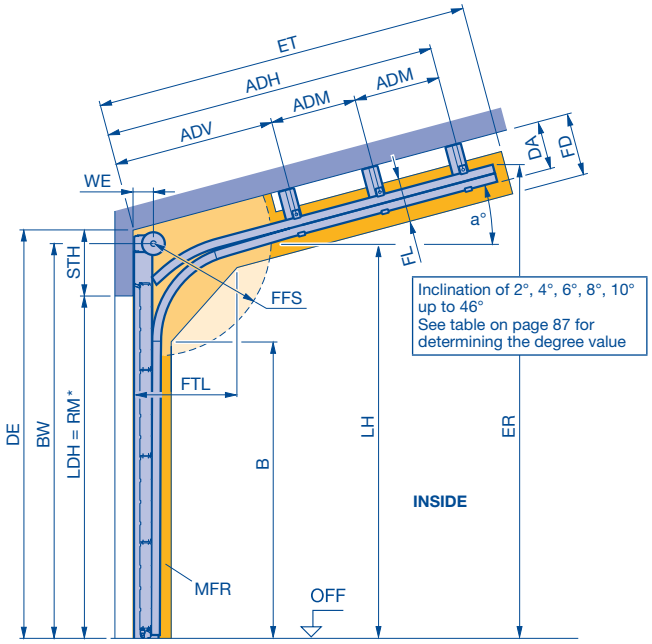

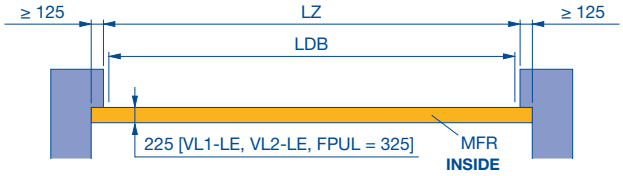

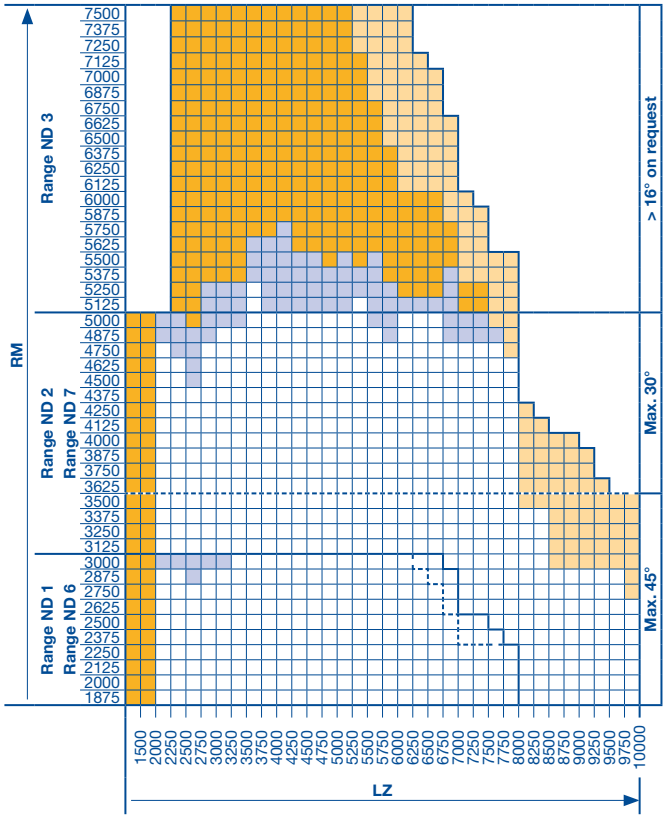

a°	Inclination
ADH	Distance to rear ceiling anchor
ADM	Distance to central ceiling anchor
ADV	Distance to front ceiling anchor
B	Start of double radius
BW	Position of shaft support
DA	Distance to ceiling on request
DE	Ceiling height
ER	Corner point, top edge of track (depth and height)
ET	Min. distance back
FD	Ceiling clearance
FFS	Spring compression clearance
FL	Track clearance
FPUL	Spring buffers below the track
FTL	Clearance door section in the double radius
LDB	Clear passage width with ThermoFrame (see page 62)
LDH	Clear passage height
LH	Track height
LZ	Clear frame dimensions **(from 1200)**
MFR	Space for fitting the door
OFF	Finished floor level (FFL)
RM	Grid height
STH	Min. headroom
WE	Shaft centre from lintel

Door weights for roof loads:

SPU 67 Thermo	= 450 N/m²
APU 67 Thermo / ALR 67 Thermo	= 500 N/m²
ALR 67 Thermo Glazing	= 600 N/m²

Observe the min. sideroom, see page 62.

Notice:

- The validity tables with the size range shown are based on the standard door type version (see product description). In case of deviations, the valid size ranges in the product configurator must be taken into account.
- The clearance required for fitting the door must be free of supply lines, heater fans, etc.
- If using the spring buffer below the track, the clear height under the track in the area of the spring buffer is reduced by 70 mm.

* Notice:

Observe clear passage height LDH, see page 36.

Notice:

- Observe the permissible size ranges of the door types on pages 9 – 14 and 17 – 25 under all circumstances!
- ALR 67 Thermo Glazing and doors with wicket door on request.
- To determine the roof slope see page 87.
- Roof slope on request for RM ≤ 3500 and > 30° or > 3500° and > 16°.

	STH	WE	BW	FT	FTL
ND 1, ≤ 30°	435	140	RM + 365	2 × WE	695, < 16° 525, ≥ 16°
ND 2, ≤ 30°	475	160	RM + 370		
ND 6, > 30°	525		RM + 420		525
ND 7, > 30°	535	180	RM + 440		
ND 3, ≤ 30°	585		RM + 450		695, < 16° 525, ≥ 16°
With double spring shaft	795		RM + 450		

ET	DA	DE	FFS	FD	FL	LH	ER	B
**	**	STH + RM	Min. 90° (745)	DA + 65	250	**	**	**

** Dimensions can be found in the product configurator.

All door types available in any version.

Door types APU 67 Thermo and ALR 67 Thermo on request.

Door type SPU 67 Thermo on request (APU 67 Thermo and ALR 67 Thermo not possible).

On request

Track limit for SPU 67 Thermo

Track limit for APU 67 Thermo and ALR 67 Thermo

Dimensions in mm

Track application: NS

Normal track application with double radius

Detailed technical data can be found in the product configurator.

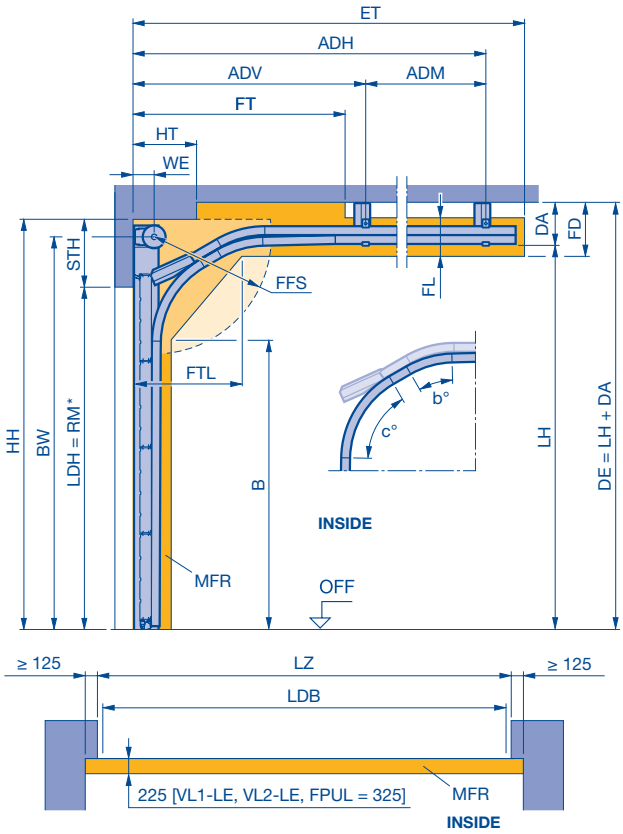

Notice:

- Observe the permissible size ranges of the door types on pages 9 – 14 and 17 – 25 under all circumstances!
- ALR 67 Thermo Glazing and doors with wicket door on request

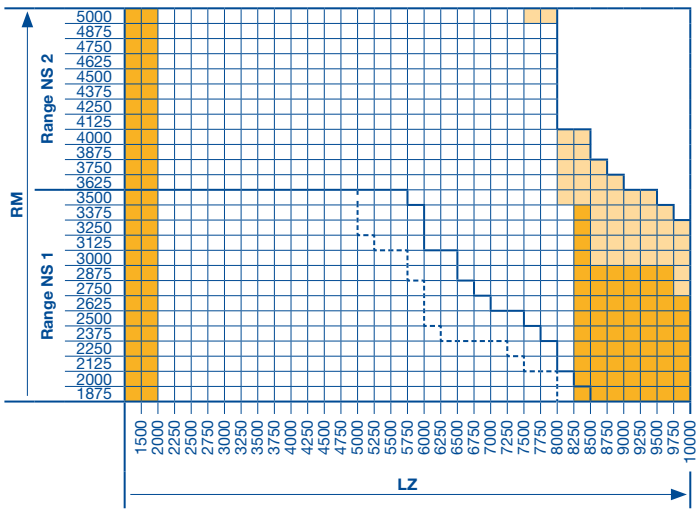

b°/c°	Contour angle
ADH	Distance to rear ceiling anchor
ADM	Distance to central ceiling anchor
ADV	Distance to front ceiling anchor
B	Start of double radius
BW	Position of shaft support
DA	Min. distance to ceiling
DE	Ceiling height
ET	Min. distance back on request
FD	Ceiling clearance
FFS	Spring compression clearance
FPUL	Spring buffers below the track
FT	Clearance for door operation
FTL	Clearance door section in the double radius
HH	Obstruction height
HT	Obstruction depth
LH	Track height
LDB	Clear passage width with ThermoFrame (see page 62)
LDH	Clear passage height
LZ	Clear frame dimensions **(from 1200)**
MFR	Space for fitting the door
OFF	Finished floor level (FFL)
RM	Grid height
STH	Min. headroom
WE	Shaft centre from lintel

Door weights for roof loads:

SPU 67 Thermo	= 450 N/m²
APU 67 Thermo / ALR 67 Thermo	= 500 N/m²
ALR 67 Thermo Glazing	= 600 N/m²

Observe the min. sideroom, see page 62.

Notice:

- A technical inspection is required!
- The validity tables with the size range shown are based on the standard door type version (see product description). In case of deviations, the valid size ranges in the product configurator must be taken into account.
- The clearance required for fitting the door must be free of supply lines, heater fans, etc.
- If using the spring buffer below the track, the clear height under the track in the area of the spring buffer is reduced by 70 mm.

*** Notice:**

Observe clear passage height LDH, see page 36.

	STH	WE	DA	BW
NS 1	425	140	205	RM + 345
NS 2	475	160		RM + 370

FT	DE	B	ET	FFS	FD	FL	FTL	LH
2 × WE	LH + 203	**	**	Min. 90° (745)	DA + 65	250	**	**

** Dimensions can be found in the product configurator.

All door types available in any version.

Door type SPU 67 Thermo on request (APU 67 Thermo and ALR 67 Thermo not possible).

On request

Track limit for SPU 67 Thermo

Track limit for APU 67 Thermo and ALR 67 Thermo

Dimensions in mm

Track application: NK

Normal track application
with double radius and inclination up to max. 30°

Detailed technical data can be found in the product configurator.

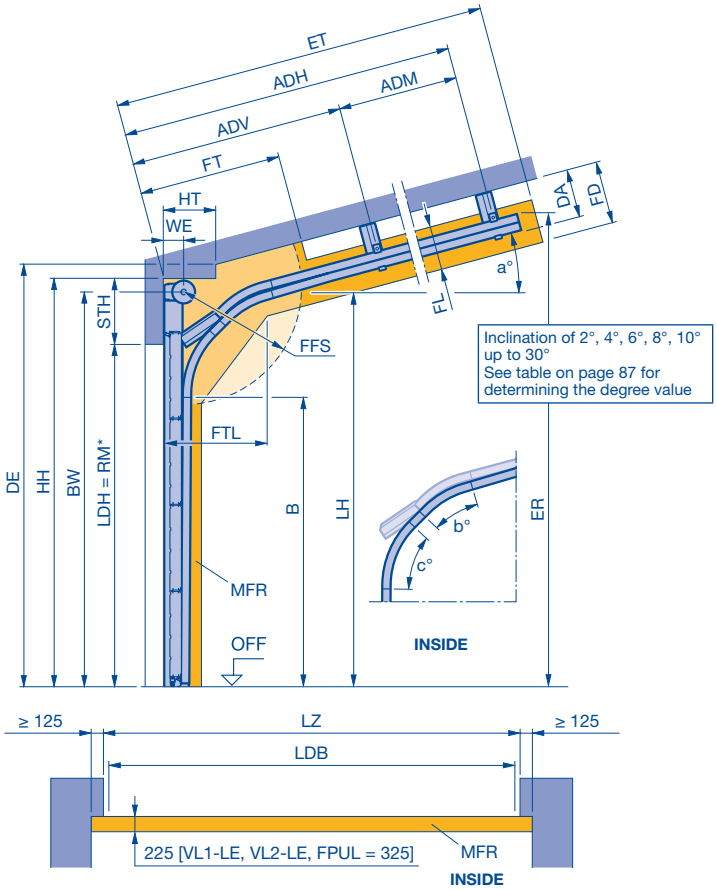

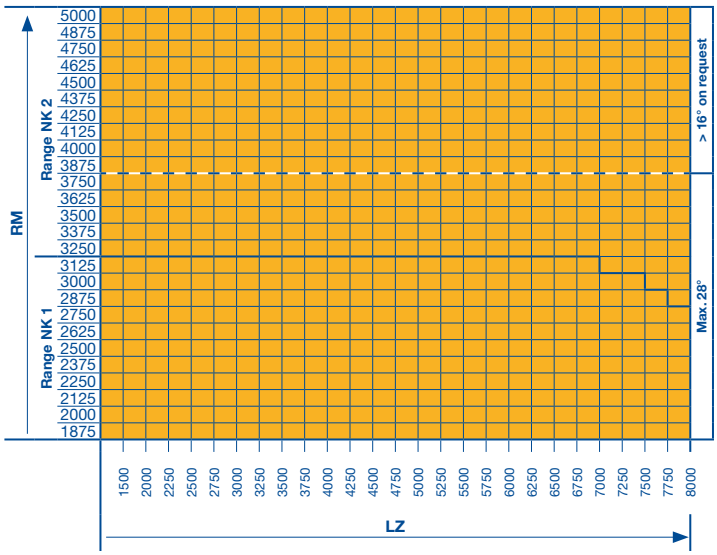

a°	Inclination
b°/c°	Contour angle
ADH	Distance to rear ceiling anchor
ADM	Distance to central ceiling anchor
ADV	Distance to front ceiling anchor
B	Start of double radius
BW	Position of shaft support
DA	Distance to ceiling on request
DE	Ceiling height
ER	Top edge corner point Track height (depth and height)
ET	Min. distance back
FD	Ceiling clearance
FFS	Spring compression clearance
FL	Track clearance
FPUL	Spring buffers below the track
FT	Clearance for door operation
FTL	Clearance door section in the double radius
HH	Obstruction height
HT	Obstruction depth
LDB	Clear passage width with ThermoFrame (see page 62)
LDH	Clear passage height
LH	Track height
LZ	Clear frame dimensions **(from 1200)**
MFR	Space for fitting the door
OFF	Finished floor level (FFL)
RM	Grid height
STH	Min. headroom
WE	Shaft centre from lintel

Door weights for roof loads:

SPU 67 Thermo	= 450 N/m²
APU 67 Thermo / ALR 67 Thermo	= 500 N/m²
ALR 67 Thermo Glazing	= 600 N/m²

Observe the min. sideroom, see page 62.

Notices:

- A technical inspection is required!
- The validity tables with the size range shown are based on the standard door type version (see product description). In case of deviations, the valid size ranges in the product configurator must be taken into account.
- The clearance required for fitting the door must be free of supply lines, heater fans, etc.
- If using the spring buffer below the track, the clear height under the track in the area of the spring buffer is reduced by 70 mm.
- Observe the permissible size ranges of the door types on pages 9 – 14 and 17 – 25 under all circumstances!
- ALR 67 Thermo Glazing and doors with wicket door on request.
- To determine the roof slope see page 87.

* Notice:

Observe clear passage height LDH, see page 36.

	STH	WE	DA	BW
NK 1	425	140	205	RM + 345
NK 2	475	160		RM + 370

FT	DE	B	ET	FFS	FD	FL	FTL	LH
2 × WE	LH + +203	**	**	Min. 90° (745)	DA + 65	250	**	**

** Dimensions can be found in the product configurator.

All door types and versions on request.

Dimensions in mm

Track application: NH

Normal track application with minimum high-lift

Detailed technical data can be found in the product configurator.

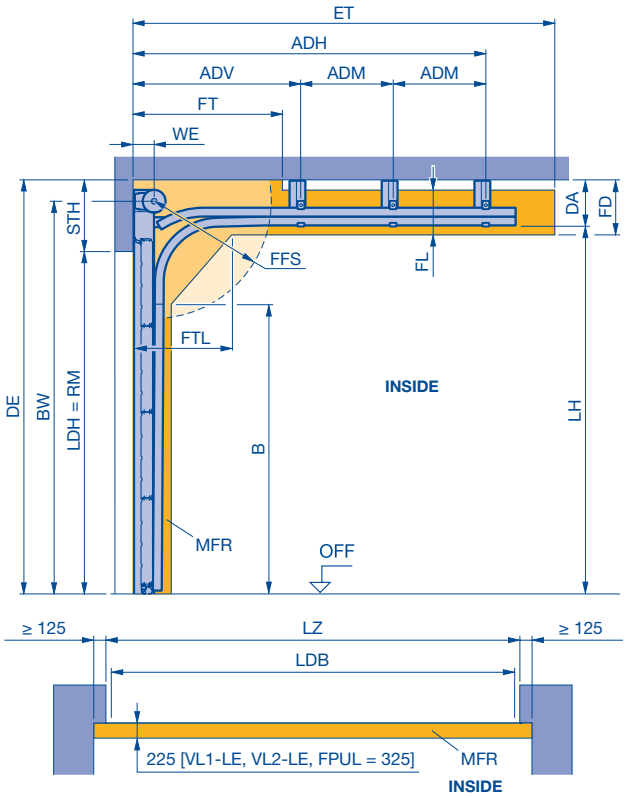

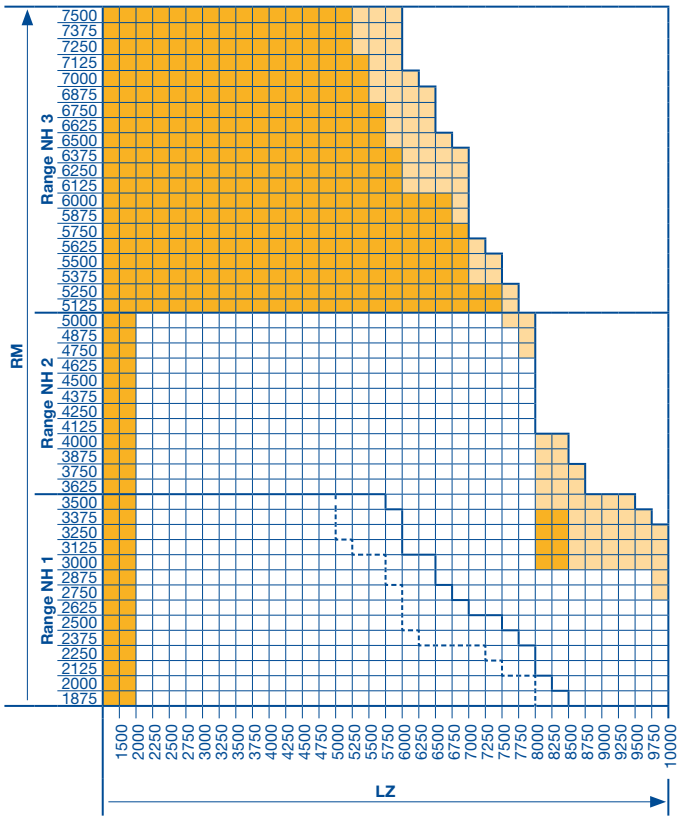

ADH	Distance to rear ceiling anchor
ADM	Distance to central ceiling anchor
ADV	Distance to front ceiling anchor
B	Start of double radius
BW	Position of shaft support
DA	Min. distance to ceiling
DE	Ceiling height
ET	Min. distance back
FD	Ceiling clearance
FFS	Spring compression clearance
FL	Track clearance
FPUL	Spring buffers below the track
FT	Clearance for door operation
FTL	Clearance door section in the double radius
L	Anchor length
LDB	Clear passage width with ThermoFrame (see page 62)
LDH	Clear passage height
LH	Track height
LZ	Clear frame dimensions **(from 1200)**
MFR	Space for fitting the door
OFF	Finished floor level (FFL)
RM	Grid height
STH	Min. headroom
WE	Shaft centre from lintel
RM	Grid height
STH	Min. headroom
WE	Shaft centre from lintel

Door weights for roof loads:

SPU 67 Thermo	= 450 N/m²
APU 67 Thermo / ALR 67 Thermo	= 500 N/m²
ALR 67 Thermo Glazing	= 600 N/m²

Observe the min. sideroom, see page 62.

Notices:

- The validity tables with the size range shown are based on the standard door type version (see product description). In case of deviations, the valid size ranges in the product configurator must be taken into account.
- The clearance required for fitting the door must be free of supply lines, heater fans, etc.
- If using the spring buffer below the track, the clear height under the track in the area of the spring buffer is reduced by 70 mm.
- Observe the permissible size ranges of the door types on pages 9 – 14 and 17 – 25 under all circumstances!
- ALR 67 Thermo Glazing and doors with wicket door on request.

	STH	WE	DA	BW
NH 1	579	140	225	LH + 140
NH 2	644	160	290	LH + 180
NH 3	719	180	365	LH + 225
with double spring shaft	760		565	

FT	DE	B	FFS	FD	FL	FTL	LH	ET
2 × WE	STH + RM	LH – 366	Min. 90° (745)	DA + 65	275	670	Min. RM + 354 Max. RM + 500	**

** Dimensions can be found in the product configurator.

All door types available in any version.

Door type SPU 67 Thermo on request (APU 67 Thermo and ALR 67 Thermo not possible).

On request

Track limit for SPU 67 Thermo

Track limit for APU 67 Thermo and ALR 67 Thermo

Dimensions in mm

Track application: GD

Normal track application

With inclination up to max. 28

Minimum high-lift

Detailed technical data can be found in the product configurator.

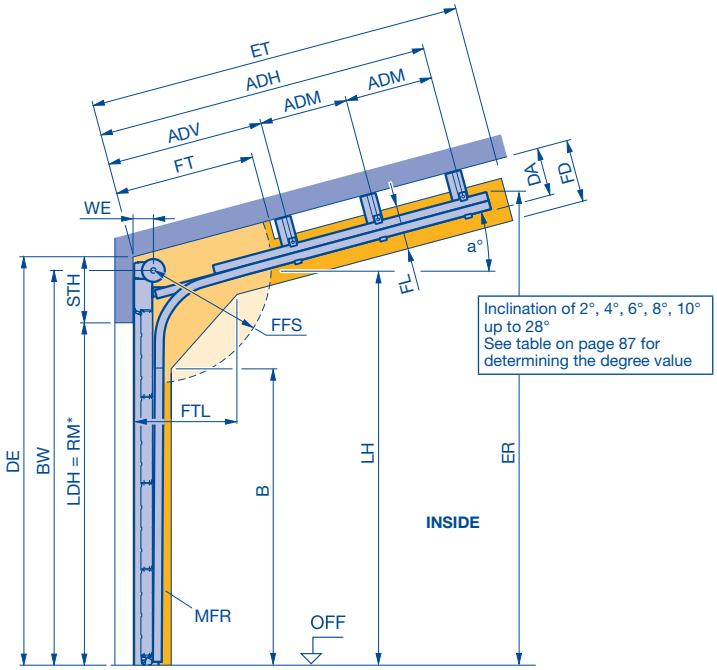

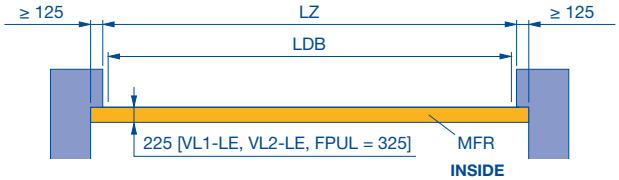

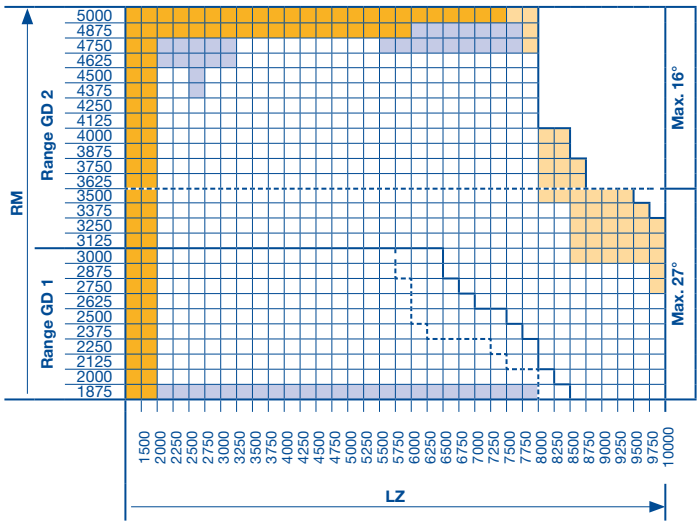

a°	Inclination	**FPUL**	Spring buffers below the track
ADH	Distance to rear ceiling anchor	**FT**	Clearance for door operation
ADM	Distance to central ceiling anchor	**FTL**	Clearance door section in the double radius
ADV	Distance to front ceiling anchor	**LDB**	Clear passage width with ThermoFrame (see page 62)
B	Start of double radius, factory specification	**LDH**	Clear passage height
BW	Position of shaft support	**LH**	Track height
DA	Distance to ceiling on request	**LZ**	Clear frame dimensions **(from 1200)**
DE	Ceiling height	**MFR**	Space for fitting the door
ER	Top edge corner point Track height (depth and height)	**OFF**	Finished floor level (FFL)
ET	Min. distance back	**RM**	Grid height
FD	Ceiling clearance	**STH**	Min. headroom
FFS	Spring compression clearance	**WE**	Shaft centre from lintel
FL	Track clearance		

Door weights for roof loads:

SPU 67 Thermo	= 450 N/m²
APU 67 Thermo / ALR 67 Thermo	= 500 N/m²
ALR 67 Thermo Glazing	= 600 N/m²

Observe the min. sideroom, see page 62.

Notices:

- The validity tables with the size range shown are based on the standard door type version (see product description). In case of deviations, the valid size ranges in the product configurator must be taken into account.
- The clearance required for fitting the door must be free of supply lines, heater fans, etc.
- If using the spring buffer below the track, the clear height under the track in the area of the spring buffer is reduced by 70 mm.
- Observe the permissible size ranges of the door types on pages 9 – 14 and 17 – 25 under all circumstances!
- ALR 67 Thermo Glazing and doors with wicket door on request.
- To determine the roof slope see page 87.

	STH	WE	DA	BW	FT	DE
GD 1	579	140	**	LH + 140	2 × WE	STH + RM
GD 2	644	160		LH + 180		

ET	B	FFS	FD	FL	FTL	LH	ER
**	LH – 366	Min. 90° (745)	DA + 65	275	670	Min. RM + 354 Max. RM + 500	**

** Dimensions can be found in the product configurator.

All door types available in any version.

Door types APU 67 Thermo and ALR 67 Thermo on request.

Door type SPU 67 Thermo on request (APU 67 Thermo and ALR 67 Thermo not possible).

On request

Track limit for SPU 67 Thermo

Track limit for APU 67 Thermo and ALR 67 Thermo

Dimensions in mm

Track application: GS

Normal track application
with double radius and minimum high-lift

Detailed technical data can be found in the product configurator.

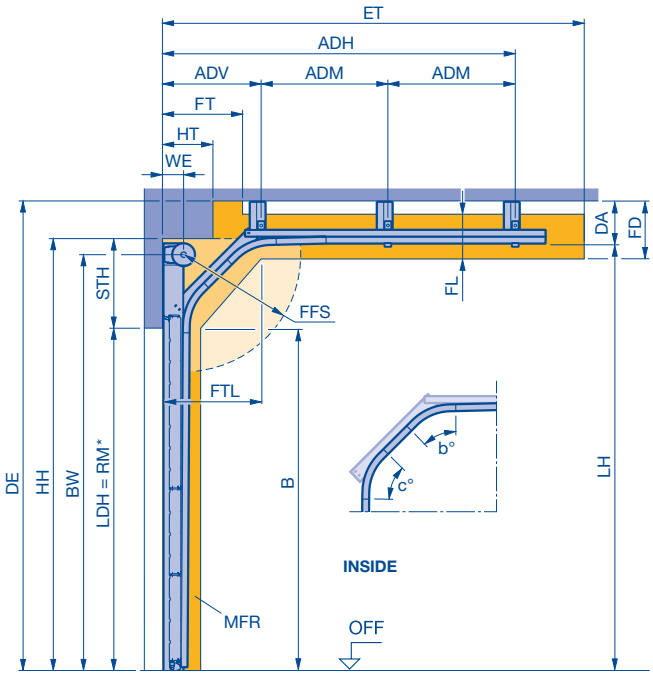

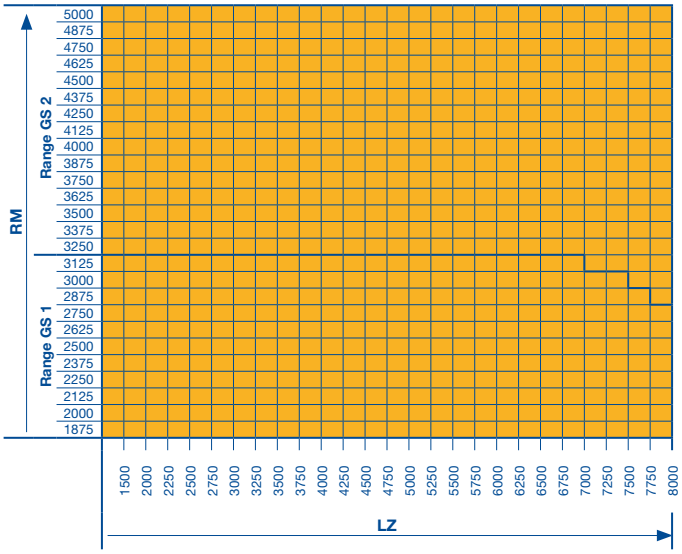

b°/c°	Contour angle
ADH	Distance to rear ceiling anchor
ADM	Distance to central ceiling anchor
ADV	Distance to front ceiling anchor
B	Start of double radius, factory specification
BW	Position of shaft support
DA	Distance to ceiling on request
DE	Ceiling height
ET	Min. distance back
FD	Ceiling clearance
FFS	Spring compression clearance
FL	Track clearance
FPUL	Spring buffers below the track
FT	Clearance for door operation
FTL	Clearance door section in the double radius
HH	Obstruction height
HT	Obstruction depth
LDB	Clear passage width with ThermoFrame (see page 62)
LDH	Clear passage height
LH	Track height
LZ	Clear frame dimensions **(from 1200)**
MFR	Space for fitting the door
OFF	Finished floor level (FFL)
RM	Grid height
STH	Min. headroom
WE	Shaft centre from lintel

Door weights for roof loads:

SPU 67 Thermo	= 450 N/m²
APU 67 Thermo / ALR 67 Thermo	= 500 N/m²
ALR 67 Thermo Glazing	= 600 N/m²

Observe the min. sideroom, see page 62.

Notices:

- A technical inspection is required!
- The validity tables with the size range shown are based on the standard door type version (see product description). In case of deviations, the valid size ranges in the product configurator must be taken into account.
- The clearance required for fitting the door must be free of supply lines, heater fans, etc.
- If using the spring buffer below the track, the clear height under the track in the area of the spring buffer is reduced by 70 mm.
- Observe the permissible size ranges of the door types on pages 9 – 14 and 17 – 25 under all circumstances!
- ALR 67 Thermo Glazing and doors with wicket door on request.
- To determine the roof slope see page 87.

	STH	WE	DA	BW	FT	DE
GS 1	567	140	205	B + 510	2 × WE	LH + +183
GS 2	617	160		B + 535		

FFS	FD	FL	FTL	LH	ET
Min. 90° (745)	DA + 65	275	**	**	**

** Dimensions can be found in the product configurator.

All door types and versions on request.

Dimensions in mm

Track application: GK

Normal track application
with double radius and inclination up to max. 30°
Minimum high-lift

Detailed technical data can be found in the product configurator.

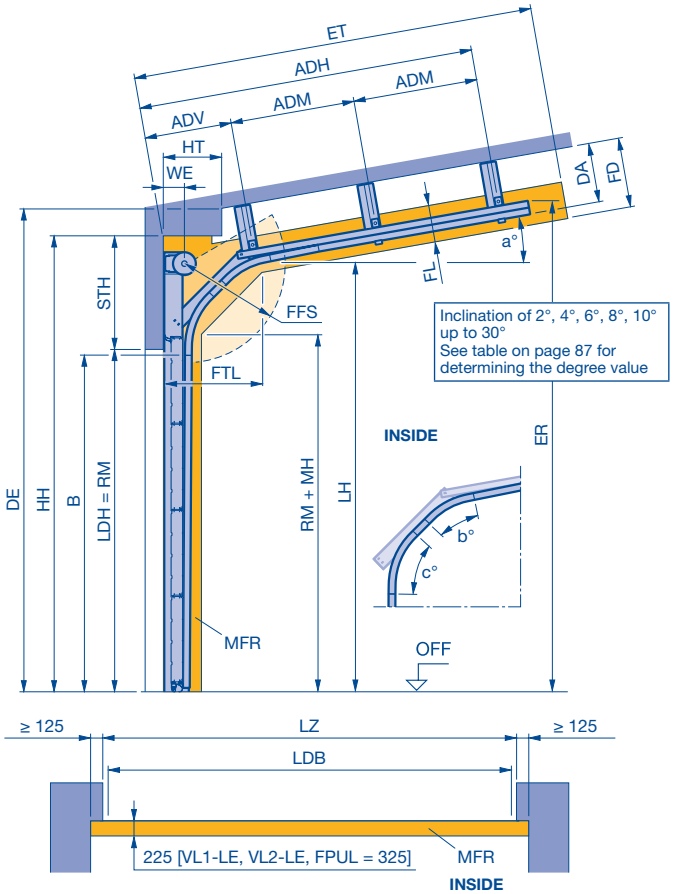

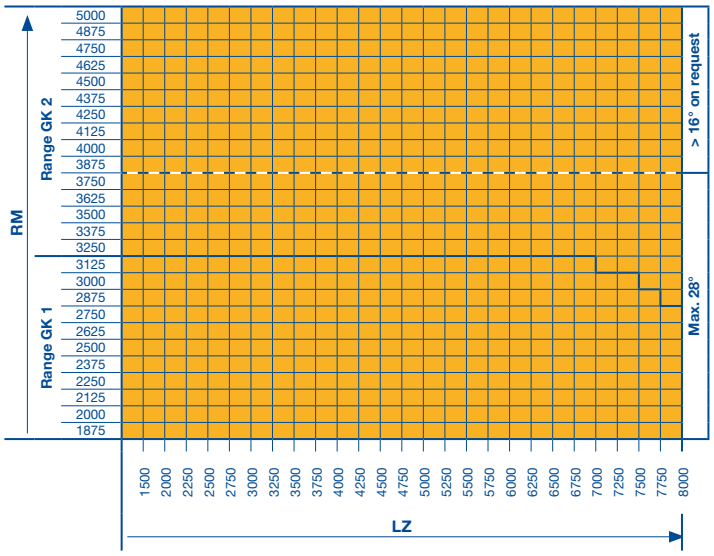

a°	Inclination
b°/c°	Contour angle
ADH	Distance to rear ceiling anchor
ADM	Distance to central ceiling anchor
ADV	Distance to front ceiling anchor
B	Start of double radius, factory specification
BW	Position of shaft support
DA	Distance to ceiling on request
DE	Ceiling height
ER	Top edge corner point Track height (depth and height)
ET	Min. distance back
FD	Ceiling clearance
FFS	Spring compression clearance
FL	Track clearance
FPUL	Spring buffers below the track
FT	Clearance for door operation
FTL	Clearance door section in the double radius
HH	Obstruction height
HT	Obstruction depth
LDB	Clear passage width with ThermoFrame (see page 62)
LDH	Clear passage height
LH	Track height
LZ	Clear frame dimensions **(from 1200)**
MFR	Space for fitting the door
OFF	Finished floor level (FFL)
RM	Grid height
STH	Min. headroom
WE	Shaft centre from lintel

Door weights for roof loads:

SPU 67 Thermo	= 450 N/m²
APU 67 Thermo / ALR 67 Thermo	= 500 N/m²
ALR 67 Thermo Glazing	= 600 N/m²

Observe the min. sideroom, see page 62.

Notices:

- A technical inspection is required!
- The validity tables with the size range shown are based on the standard door type version (see product description). In case of deviations, the valid size ranges in the product configurator must be taken into account.
- The clearance required for fitting the door must be free of supply lines, heater fans, etc.
- If using the spring buffer below the track, the clear height under the track in the area of the spring buffer is reduced by 70 mm.
- Observe the permissible size ranges of the door types on pages 9 – 14 and 17 – 25 under all circumstances!
- ALR 67 Thermo Glazing and doors with wicket door on request.
- To determine the roof slope see page 87.

	STH	WE	DA	BW	FT	DE
GK 1	567	140	205	B + 510	2 × WE	LH + +183
GK 2	617	160		B + 535		

FFS	FD	FL	FTL	LH	ET
Min. 90° (745)	DA + 65	275	**	**	**

** Dimensions can be found in the product configurator.

All door types and versions on request.

Dimensions in mm

Track application: L

Low headroom track application

Detailed technical data can be found in the product configurator.

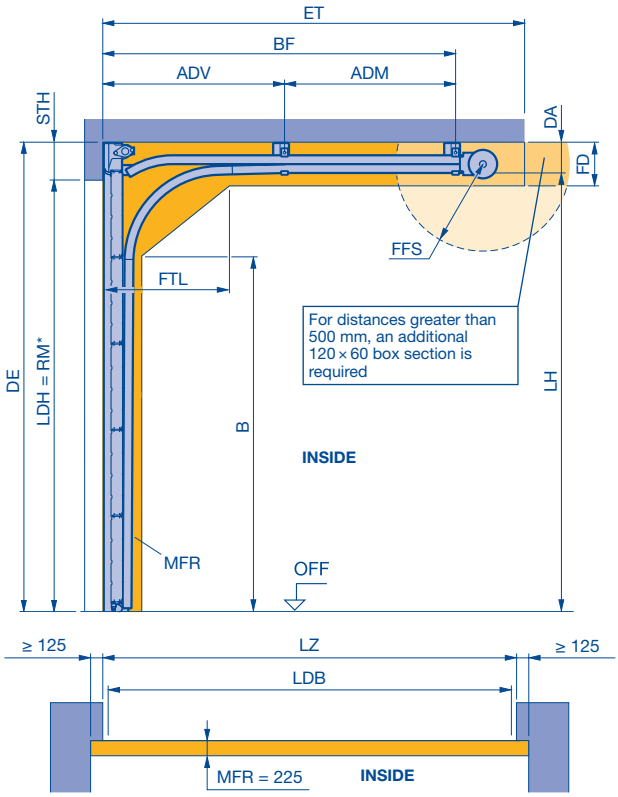

MFR = 285	Trap protection for swivel mechanism RM < 2800
MFR = 325	Leading photocell VL1/VL2

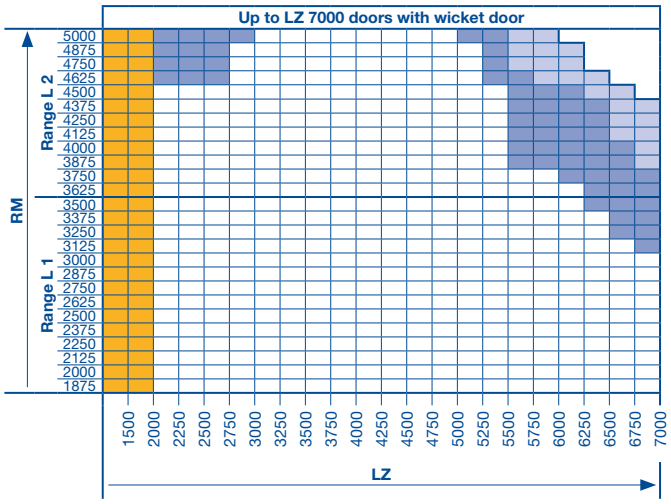

ADM	Distance to central ceiling anchor	**LH**	Track height
ADV	Distance to front ceiling anchor	**LDB**	Clear passage width with ThermoFrame (see page 62)
B	Start of double radius	**LDH**	Clear passage height
BF	Position of spring shaft	**LZ**	Clear frame dimensions **(from 1200)**
ET	Min. distance back	**MFR**	Space for fitting the door
DA	Min. distance to ceiling	**OFF**	Finished floor level (FFL)
DE	Min. ceiling height	**RM**	Grid height
FD	Min. ceiling clearance	**STH**	Min. headroom
FFS	Spring compression clearance		
FTL	Clearance door section in the double radius		

Door weights for roof loads:

SPU 67 Thermo	= 450 N/m²
APU 67 Thermo / ALR 67 Thermo	= 500 N/m²
ALR 67 Thermo Glazing	= 600 N/m²

Observe the min. sideroom, see page 62.

Door operation:

- Manually operated: rope or chain hoist (recommended for manual operation!)
- Power-driven: WA 400 / 500 FU only with chain box! ITO only possible without swivel mechanism!
- WA 300 on request!

Notices:

- The validity tables with the size range shown are based on the standard door type version (see product description). In case of deviations, the valid size ranges in the product configurator must be taken into account.
- The clearance required for fitting the door must be free of supply lines, heater fans, etc.
- Observe the permissible size ranges of the door types on pages 9 – 14 and 17 – 25 under all circumstances!
- ALR 67 Thermo Glazing on request.

* Notice:

Observe clear passage height LDH, see page 36.

B	BF *	DA	DE	ET *
LH - 517	RM + 695	191	STH + RM	RM + 1007
FD	**FFS**	**FTL**	**LH**	**STH**
DA + 65	Min. 90° (745)	675	RM + 59	250

* with swing mechanism, ET = RM + 916 and BF = RM + 604

All door types available in any version.

All door types on request.

Door type APU 67 Thermo and ALR 67 Thermo on request.

All doors with wicket doors on request.

Track limit

Dimensions in mm

Track application: LD

Low headroom track application with inclination up to max. 30°

Detailed technical data can be found in the product configurator.

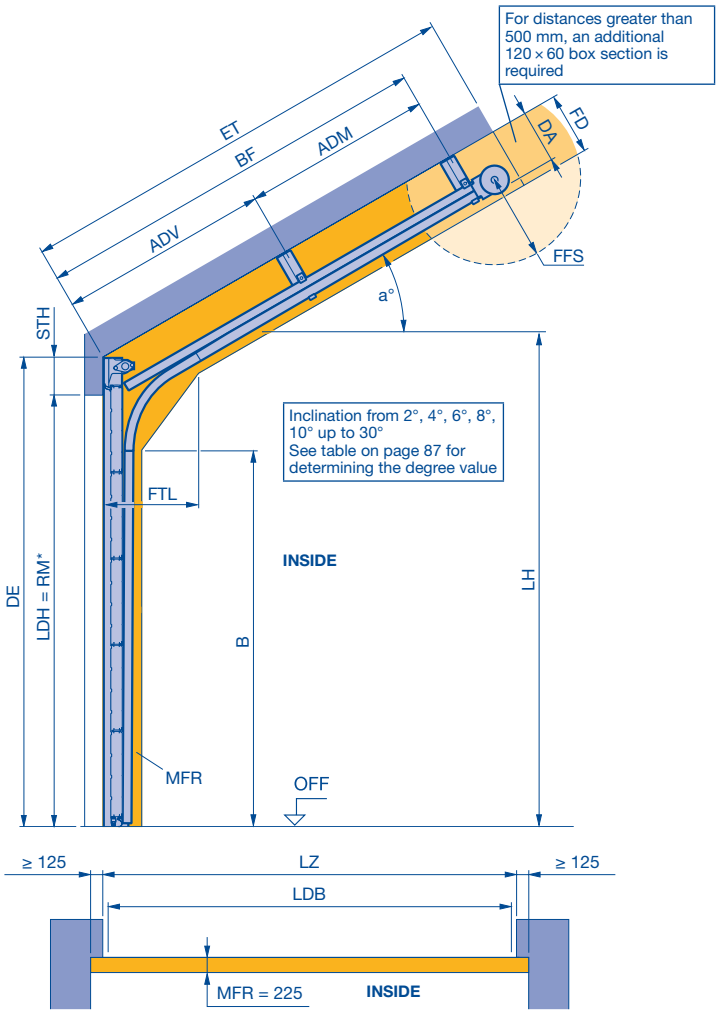

MFR = 285	Trap protection for swivel mechanism RM < 2800
MFR = 325	Leading photocell VL1/VL2

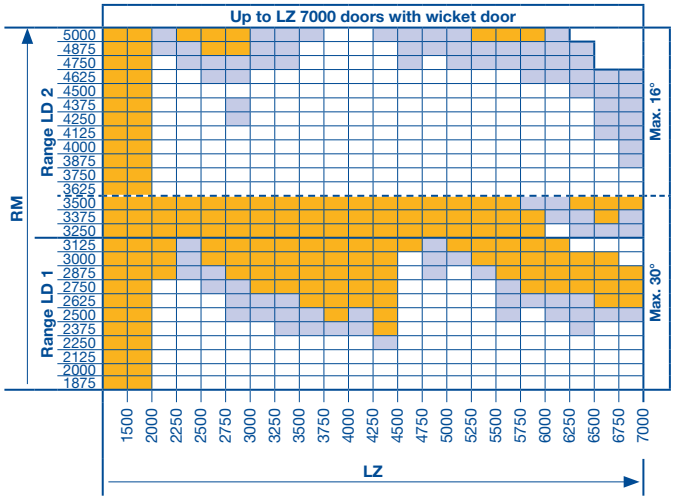

a°	Inclination
ADM	Distance to central ceiling anchor on request
ADV	Distance to front ceiling anchor
B	Start of double radius on request
BF	Position of spring shaft on request
DA	Distance to ceiling on request
DE	Min. ceiling height
ET	Min. distance back
FD	Min. ceiling clearance
FFS	Spring compression clearance
FTL	Clearance door section in the double radius
LDB	Clear passage width with ThermoFrame (see page 62)
LDH	Clear passage height
LZ	Clear frame dimensions **(from 1200)**
MFR	Space for fitting the door
OFF	Finished floor level (FFL)
RM	Grid height
STH	Min. headroom

Door weights for roof loads:

SPU 67 Thermo	= 450 N/m²
APU 67 Thermo / ALR 67 Thermo	= 500 N/m²
ALR 67 Thermo Glazing	= 600 N/m²

Observe the min. sideroom, see page 62.

Door operation:

- Manually operated: rope or chain hoist (recommended for manual operation!)
- Power-driven: WA 400 / 500 FU only with chain box! ITO or SupraMatic HT only possible without swivel mechanism!

Notices:

- The validity tables with the size range shown are based on the standard door type version (see product description). In case of deviations, the valid size ranges in the product configurator must be taken into account.
- The clearance required for fitting the door must be free of supply lines, heater fans, etc.
- Observe the permissible size ranges of the door types on pages 9 – 14 and 17 – 25 under all circumstances!
- ALR 67 Thermo Glazing and doors with wicket door as well as glazings with S4, U4, A4, B4, M4, E2, G2, C4 must be requested.
- Doors with WA 300 on request!
- To determine the roof slope see page 87.

* Notes:

- Observe clear passage height LDH, see page 36.
- The swivel mechanism is only possible up to 10°.

	DE	LH	STH	FD
LD 1 / LD 2	STH + RM	**	250	DA + 65

B	DA	FFS	FTL
**	**	Min. 90° (745)	675

** Dimensions can be found in the product configurator.

ET***		
LD 1 / LD 2	(RM + 990) – (8 × a°)	All versions

*** Simplified calculation

All door types available in any version.

All door types on request.

Door types APU 67 Thermo and ALR 67 Thermo on request.

Track limit

Dimensions in mm

Track application: H

High-lift track application

Detailed technical data can be found in the product configurator.

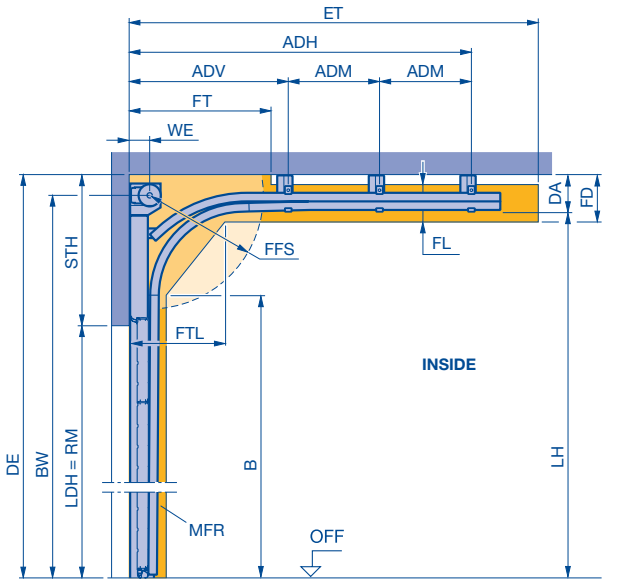

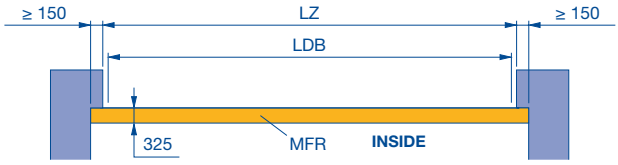

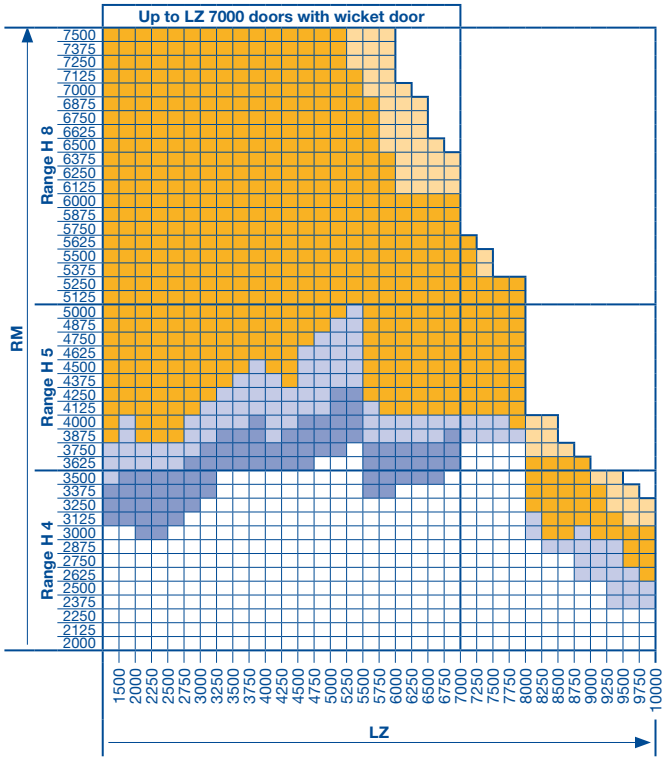

All door types available in any version.

Door types APU 67 Thermo and ALR 67 Thermo on request.

All door types with wicket door on request.

Door type SPU 67 Thermo on request (APU 67 Thermo and ALR 67 Thermo not possible).

All door types on request.

ADH Distance to rear ceiling anchor
ADM Distance to central ceiling anchor
ADV Distance to front ceiling anchor
B Start of double radius
BW Position of shaft support
DA Min. distance to ceiling
DE Min. ceiling height
ET Min. distance back
FD Min. ceiling clearance
FFS Spring compression clearance
FL Track clearance
FT Clearance for door operation
FTL Clearance door section in the double radius
LDB Clear passage width with ThermoFrame (see page 62)
LDH Clear passage height
LH Track height
LZ Clear frame dimensions **(from 1200)**
MFR Space for fitting the door
OFF Finished floor level (FFL)
RM Grid height
STH Min. headroom
WE Shaft centre from lintel

Please note:
Select required track height according to the door height in table.

Notice:
- The validity tables with the size range shown are based on the standard door type version (see product description). In case of deviations, the valid size ranges in the product configurator must be taken into account.
- The clearance required for fitting the door must be free of supply lines, heater fans, etc.
- If using the spring buffer below the track, the clear height under the track in the area of the spring buffer is reduced by 70 mm.

Notices:
- Observe the permissible size ranges of the door types on pages 9 – 14 and 17 – 25 under all circumstances!
- ALR 67 Thermo Glazing on request.

Observe the min. sideroom, see page 62.

	STH	WE	DA	BW
H 4	LH – RM + 280	160	280	LH + 140
H 5	LH – RM + 340 (515*)	180	340 (515*)	LH + 170
H 8	LH – RM + 380 (540*)	205	380 (540*)	LH + 195

* with double spring shaft

B	DE	FD	FFS	FL	FT	FTL
LH - 513	STH + RM	DA + 65	Min. 90° (745)	275	2 × WE	675

	ET*	
H 4 / H 5	2 × RM – LH + 982 + 297	For manual operation with long spring buffer (standard)
	2 × RM – LH + 712 + 297	For shaft operator with long spring buffer LH – RM ≤ 1000
	2 × RM – LH + 712 + 297	For shaft operator WA 300 with long spring buffer LH – RM > 1000
	2 × RM – LH + 712 + 27	For shaft operator WA 400 / WA 500 FU with spring buffer, short LH – RM > 1000
H 8	2 × RM – LH + 712 + 297	All versions

* Simplified calculation

Table: track heights (LH)

Door height RM	Min. LH	Max. LH		Door height RM	Min. LH	Max. LH	
5000	5500	8350	H 5				
4875	5375	8225					
4750	5250	8100					
4625	5125	7975					
4500	5000	7850					
4375	4875	7725		7500	8605	10250	H 8 All door types and versions available on request
4250	4750	7600		7375	8480	10250	
4125	4625	7475		7250	8355	10250	
4000	4500	7235		7125	8230	10250	
3875	4375	6985		7000	8105	10250	
3750	4250	6735		6875	7980	10250	
3625	4125	6485		6750	7855	10200	
3500	4000	6235	H 4	6625	7730	10075	
3375	3875	5985		6500	7605	9950	
3250	3750	5735		6375	6875	9825	
3125	3625	5485		6250	6750	9700	
3000	3500	5235		6125	6625	9575	
2875	3375	4985		6000	6500	9450	
2750	3250	4735		5875	6375	9325	
2625	3125	4485		5750	6250	9200	
2500	3000	4235		5625	6125	9075	
2375	2875	3985		5500	6000	8950	
2250	2750	3735		5375	5875	8825	
2125	2625	3485		5250	5750	8700	
2000	2500	3235		5125	5625	8575	

Track application: HA

High-lift track application
with high-mounted torsion spring shaft

Detailed technical data can be found in the product configurator.

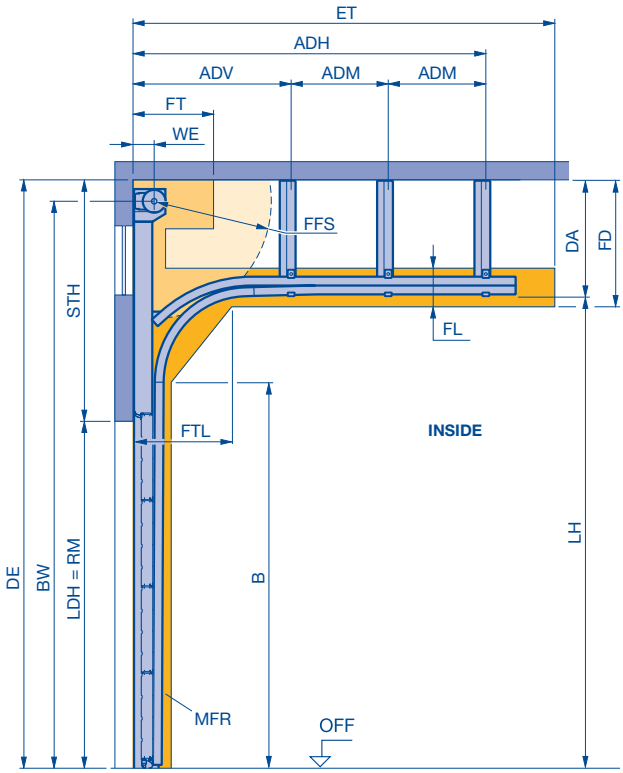

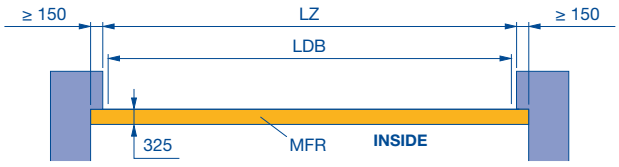

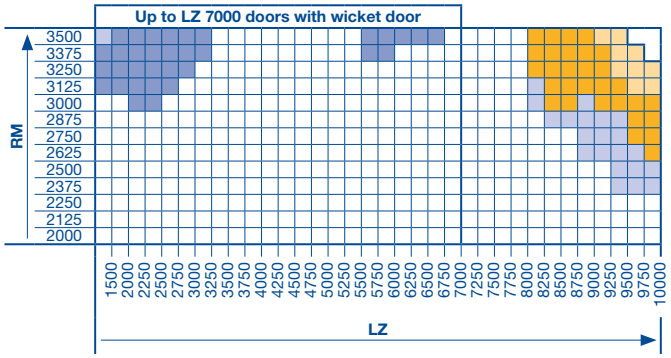

	ET*	
HA 4	2 × RM – LH + 982 + 297	For manual operation with long spring buffer (standard)
	2 × RM – LH + 712 + 297	For shaft operator with long spring buffer LH – RM ≤ 1000
	2 × RM – LH + 712 + 297	For shaft operator WA 300 with long spring buffer LH – RM > 1000
	2 × RM – LH + 712 + 27	For shaft operator WA 400 / WA 500 FU with spring buffer, short LH – RM > 1000

* Simplified calculation

ADH Distance to rear ceiling anchor
ADM Distance to central ceiling anchor (see page 68)
ADV Distance to front ceiling anchor
B Start of double radius
BW Position of shaft support
DA Min. distance to ceiling
DE Min. ceiling height
ET Min. distance back
FD Ceiling clearance
FFS Spring compression clearance
FL Track clearance
FT Clearance for door operation
FTL Clearance door section in the double radius
LDB Clear passage width with ThermoFrame (see page 62)
LDH Clear passage height
LH Track height
LZ Clear frame dimensions **(from 1200)**
MFR Space for fitting the door
OFF Finished floor level (FFL)
RM Grid height
STH Min. headroom
WE Shaft centre from lintel

Please note:
Select required track height according to the door height in table.

Notice:
- The validity tables with the size range shown are based on the standard door type version (see product description). In case of deviations, the valid size ranges in the product configurator must be taken into account.
- The clearance required for fitting the door must be free of supply lines, heater fans, etc.
- If using the spring buffer below the track, the clear height under the track in the area of the spring buffer is reduced by 70 mm.

Observe the min. sideroom, see page 62.

	STH	DA	DE	B	Min. BW
HA 4	(BW + 140) – RM	(BW + 140) – LH	STH + RM	LH - 513	LH + 150

Max. BW	FD	FFS	FL	FT	FTL	WE
8120, DE – 140	DA + 65	Min. 90° (745)	275	2 × WE	675	160

Table: track heights (LH)

Door height RM	Min. LH	Max. LH	
3500	4000	6215	HA 4
3375	3875	5965	
3250	3750	5715	
3125	3625	5465	
3000	3500	5215	
2875	3375	4965	
2750	3250	4715	
2625	3125	4465	
2500	3000	4215	
2375	2875	3965	
2250	2750	3715	
2125	2625	3465	
2000	2500	3215	

Notices:
- Observe the permissible size ranges of the door types on pages 9 – 14 and 17 – 25 under all circumstances!
- ALR 67 Thermo Glazing on request.

All door types available in any version.

Door types APU 67 Thermo and ALR 67 Thermo on request.

All door types with wicket door on request.

Door type SPU 67 Thermo on request (APU 67 Thermo and ALR 67 Thermo not possible).

All door types on request.

Dimensions in mm

Track application: HD

High-lift track application with inclination up to max. 30°

Detailed technical data can be found in the product configurator.

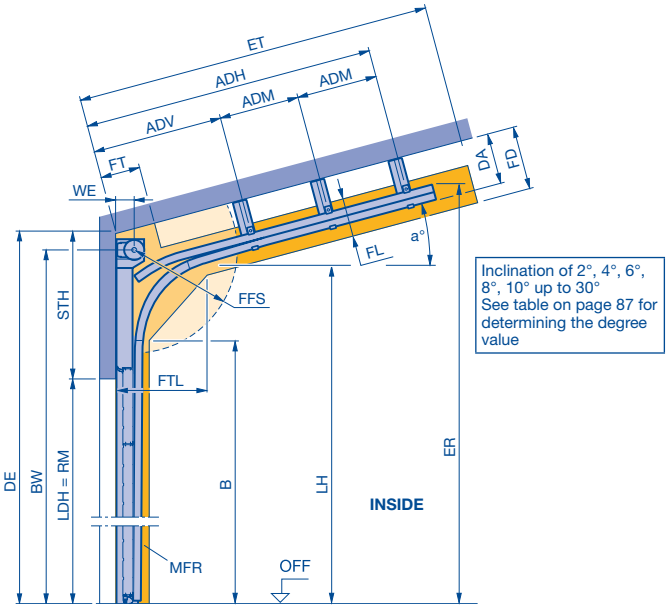

Inclination of 2°, 4°, 6°, 8°, 10° up to 30°
See table on page 87 for determining the degree value

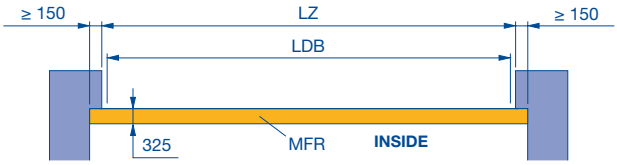

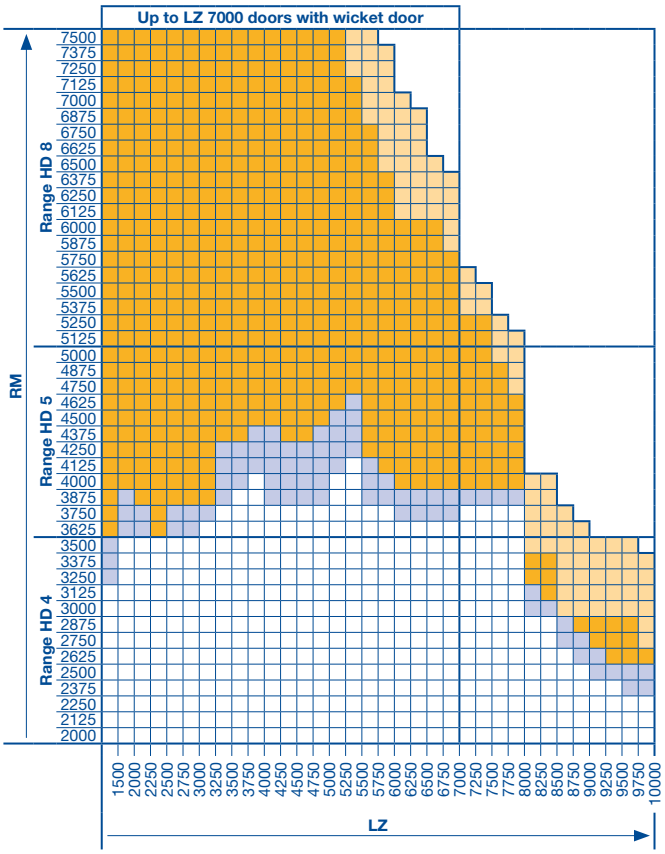

a°	Inclination
ADH	Distance to rear ceiling anchor
ADM	Distance to central ceiling anchor on request
ADV	Distance to front ceiling anchor
B	Start of double radius
BW	Position of shaft support
DA	Distance to ceiling on request
DE	Min. ceiling height
ER	Top edge corner point Track height (depth and height)
ET	Min. distance back
FD	Ceiling clearance
FFS	Spring compression clearance
FL	Track clearance
FT	Clearance for door operation
FTL	Clearance door section in the double radius
LDB	Clear passage width with ThermoFrame (see page 62)
LDH	Clear passage height
LH	Track height (see table on page 48)
LZ	Clear frame dimensions **(from 1200)**
MFR	Space for fitting the door
OFF	Finished floor level (FFL)
RM	Grid height
STH	Min. headroom
WE	Shaft centre from lintel

Please note:
Select required track height according to the door height in the table on page 48.

Notices:

- The validity tables with the size range shown are based on the standard door type version (see product description). In case of deviations, the valid size ranges in the product configurator must be taken into account.
- The clearance required for fitting the door must be free of supply lines, heater fans, etc.
- If using the spring buffer below the track, the clear height under the track in the area of the spring buffer is reduced by 70 mm.
- Observe the permissible size ranges of the door types on pages 9 – 14 and 17 – 25 under all circumstances!
- ALR 67 Thermo Glazing on request.
- To determine the roof slope see page 87.
- Inclination > 10° to 30° on request.

Observe the min. sideroom, see page 62.

	STH	BW	WE	DA	B
HD 4	780	LH + 140	160	**	LH – 513
HD 5	840	LH + 170	180		
HD 8	880	LH + 195	205		

FT	FL	FTL	FFS	FD	ET	ER
2 × WE	275	675	Min. 90° (745)	DA + 65	**	**

** Dimensions can be found in the product configurator.

All door types available in any version.

Door types APU 67 Thermo and ALR 67 Thermo on request.

Door type SPU 67 Thermo on request (APU 67 Thermo and ALR 67 Thermo not possible).

All door types on request.

Dimensions in mm

Track application: HS

High-lift track application with double radius

Detailed technical data can be found in the product configurator.

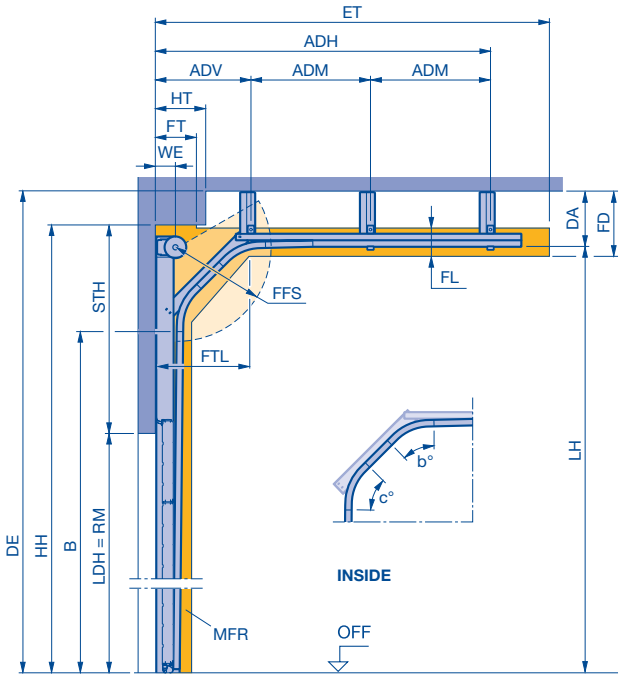

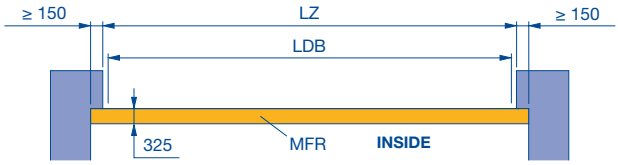

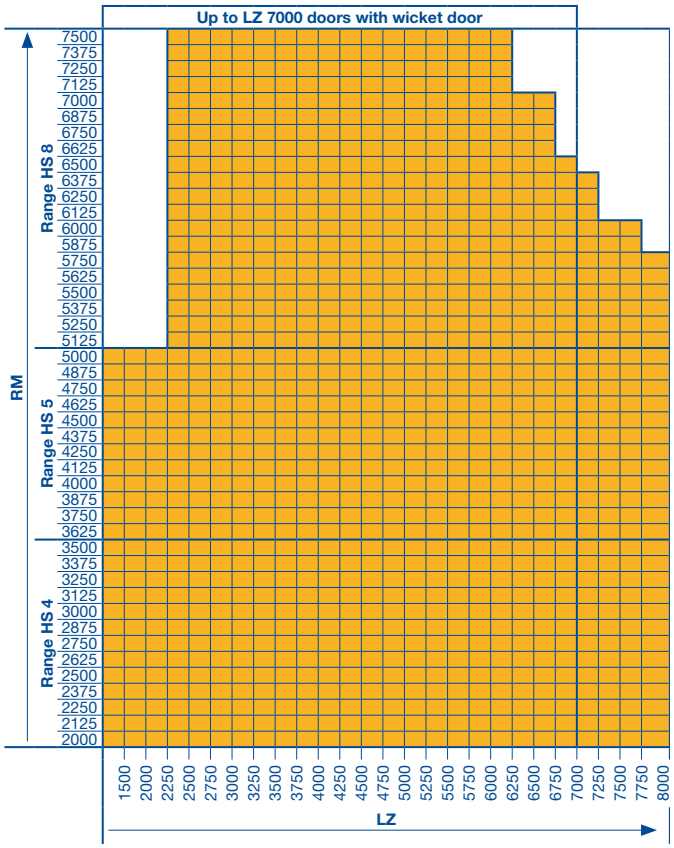

b°/c°	Contour angle
ADH	Distance to rear ceiling anchor
ADM	Distance to central ceiling anchor
ADV	Distance to front ceiling anchor
B	Start of double radius, factory specification
DA	Distance to ceiling on request
DE	Min. ceiling height
ET	Distance back
FD	Ceiling clearance
FFS	Spring compression clearance
FL	Track clearance
FT	Clearance for door operation, on request
FTL	Clearance door section in the double radius
FFW	Spring shaft clearance
HH	Obstruction height
HT	Obstruction depth
LDB	Clear passage width with ThermoFrame (see page 62)
LDH	Clear passage height
LH	Track height
LZ	Clear frame dimensions **(from 1200)**
MFR	Space for fitting the door
OFF	Finished floor level (FFL)
RM	Grid height
STH	Min. headroom
WE	Shaft centre from lintel

Please note:
Select required track height according to the door height in the table on page 48.

Notice:
- A technical inspection is required!
- The validity tables with the size range shown are based on the standard door type version (see product description). In case of deviations, the valid size ranges in the product configurator must be taken into account.
- The clearance required for fitting the door must be free of supply lines, heater fans, etc.

Notices:
- Observe the permissible size ranges of the door types on pages 9 – 14 and 17 – 25 under all circumstances!
- ALR 67 Thermo Glazing on request.

Observe the min. sideroom, see page 62.

	STH	WE	DA	DE	B
HS 4	785	160	**	LH + 203	**
HS 5	812	180			
HS 8	852	205			

BW	FT	FL	FTL	FFS	FD	ET	ER
**	2 × WE	275	**	Min. 90° (745)	DA + 65	**	**

** Dimensions can be found in the product configurator.

All door types and versions on request.

Dimensions in mm

Track application: HK

High-lift track application
with double radius and inclination up to max. 30°

Detailed technical data can be found in the product configurator.

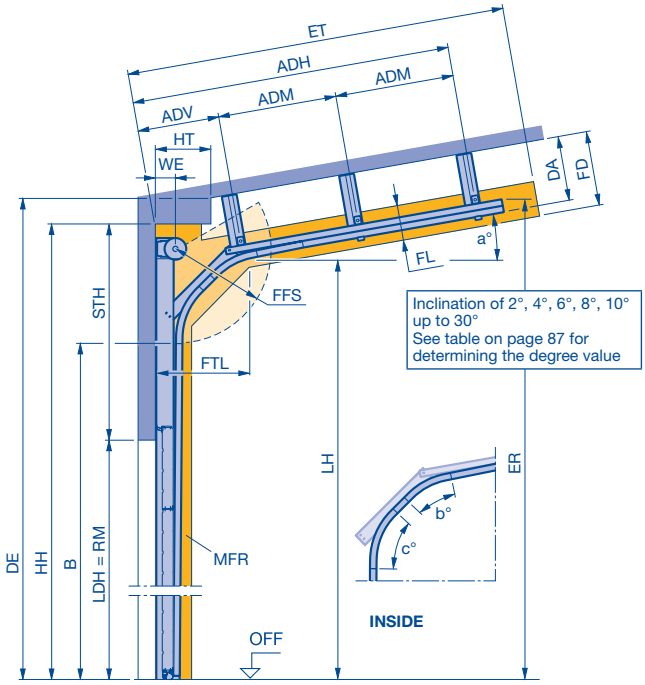

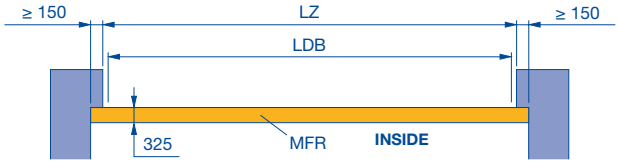

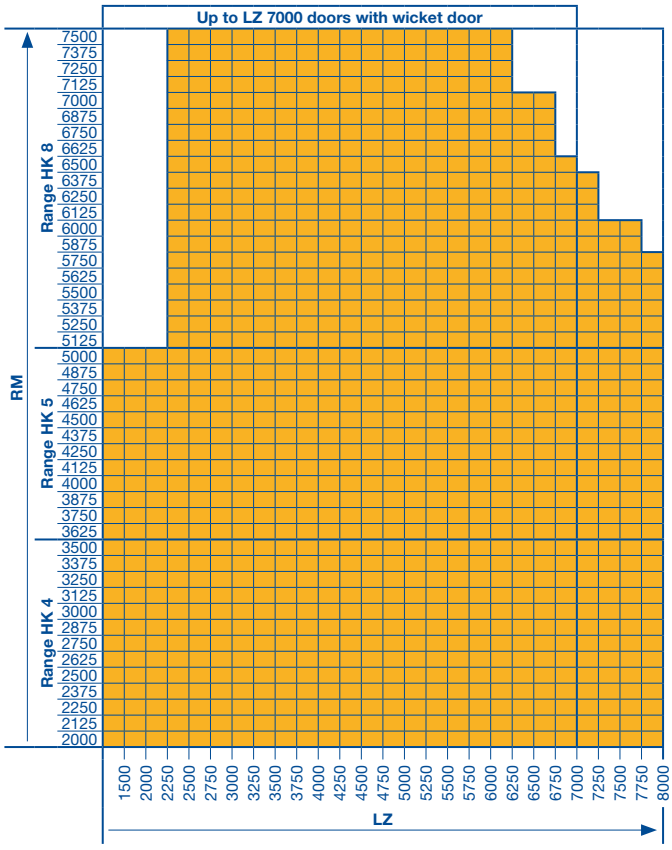

a°	Inclination
b°/c°	Contour angle
ADH	Distance to rear ceiling anchor
ADM	Distance to central ceiling anchor
ADV	Distance to front ceiling anchor
B	Start of double radius, factory specification
DA	Distance to ceiling on request
DE	Min. ceiling height
ER	Top edge corner point Track height (depth and height)
FD	Ceiling clearance
FFS	Spring compression clearance
FL	Track clearance
FT	Clearance for door operation, on request
FTL	Clearance door section in the double radius
FFW	Spring shaft clearance
HH	Obstruction height
HT	Obstruction depth
LDB	Clear passage width with ThermoFrame (see page 62)
LDH	Clear passage height
LH	Track height
LZ	Clear frame dimensions **(from 1200)**
MFR	Space for fitting the door
OFF	Finished floor level (FFL)
RM	Grid height
STH	Min. headroom
WE	Shaft centre from lintel

Please note:
Select required track height according to the door height in the table on page 48.

Notice:
- A technical inspection is required!
- The validity tables with the size range shown are based on the standard door type version (see product description). In case of deviations, the valid size ranges in the product configurator must be taken into account.
- The clearance required for fitting the door must be free of supply lines, heater fans, etc.

Notices:
- Observe the permissible size ranges of the door types on pages 9 – 14 and 17 – 25 under all circumstances!
- ALR 67 Thermo Glazing on request.
- To determine the roof slope see page 87.
- Roof slope > 10° to 30° on request.

Observe the min. sideroom, see page 62.

	STH	WE	DA	DE	B
HK 4	785	160	**	LH + 203	**
HK 5	812	180			
HK 8	852	205			

BW	FT	FL	FTL	FFS	FD	ET	ER
**	2 × WE	275	**	Min. 90° (745)	DA + 65	**	**

** Dimensions can be found in the product configurator.

All door types and versions on request.

Dimensions in mm

Track application: HU

High-lift track application
with low-mounted torsion spring shaft

Detailed technical data can be found in the product configurator.

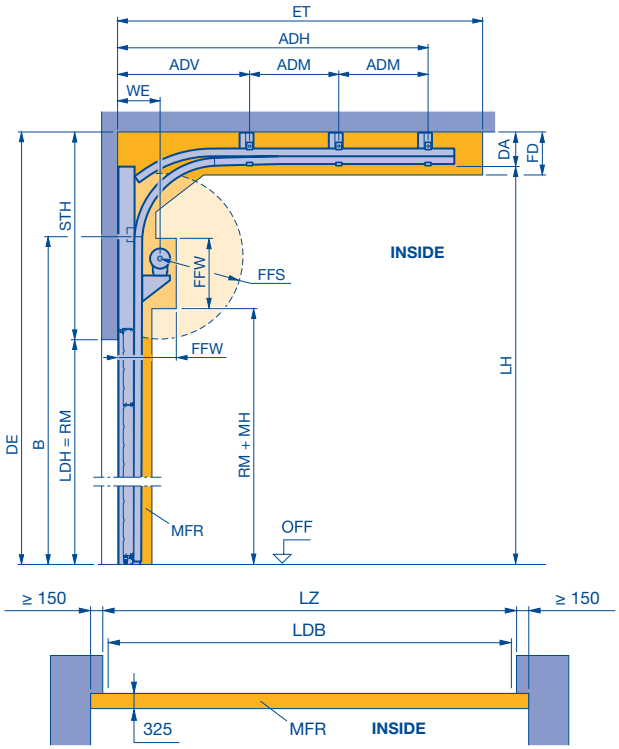

		ET*
HU 4 / HU 5	2 × RM – LH + 982 + 297	For manual operation with long spring buffer (standard)
	2 × RM – LH + 712 + 297	For shaft operator WA 300 with long spring buffer
	2 × RM – LH + 712 + 27	For shaft operator WA 400 / WA 500 FU with short spring buffer
HU 8	2 × RM – LH + 712 + 297	All versions

* Simplified calculation.

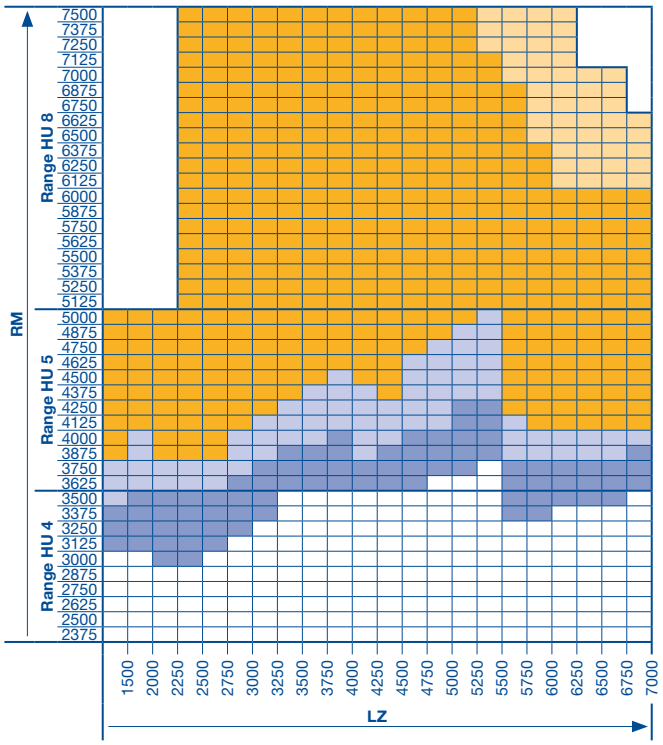

ADH	Distance to rear ceiling anchor	**LDH**	Clear passage height
ADM	Distance to central ceiling anchor	**LH**	Track height
ADV	Distance to front ceiling anchor	**LZ**	Clear frame dimensions **(from 1200)**
B	Start of double radius	**MFR**	Space for fitting the door
DA	Min. distance to ceiling	**MH**	Fitting height
DE	Min. ceiling height	**OFF**	Finished floor level (FFL)
ET	Min. distance back	**RM**	Grid height
FD	Min. ceiling clearance	**STH**	Min. headroom
FFS	Spring compression clearance	**WE**	Shaft centre from lintel
FFW	Spring shaft clearance		
LDB	Clear passage width with ThermoFrame (see page 62)		

Please note:
Select required track height according to the door height in table.

Notice:
- The validity tables with the size range shown are based on the standard door type version (see product description). In case of deviations, the valid size ranges in the product configurator must be taken into account.
- The clearance required for fitting the door must be free of supply lines, heater fans, etc.

Observe the min. sideroom, see page 62.

	STH	WE	DA	FFW
HU 4	LH – RM + 215	335	215	500 × 850
HU 5		355		540 × 850
HU 8		395		620 × 850

B	DE	FD	FFS	MH
LH - 513	STH + RM	DA + 65	Min. 90° (745)	400

Table: track heights (LH)

Door height RM	Min. LH	Max. LH		Door height RM	Min. LH	Max. LH	
5000	6560	8350	HU 5				
4875	6435	8225					
4750	6310	8100		7500	9060	10250	HU 8 All door types and versions available on request
4625	6185	7975		7375	8935	10250	
4500	6060	7850		7250	8810	10250	
4375	5935	7725		7125	8685	10250	
4250	5810	7600		7000	8560	10250	
4125	5685	7475		6875	8435	10250	
4000	5560	7235		6750	8310	10200	
3875	5435	6985		6625	8185	10075	
3750	5310	6735		6500	8060	9950	
3625	5185	6485		6375	7935	9825	
3500	5060	6235	HU 4	6250	7810	9700	
3375	4935	5985		6125	7685	9575	
3250	4810	5735		6000	7560	9450	
3125	4685	5485		5875	7435	9325	
3000	4560	5235		5750	7310	9200	
2875	4435	4985		5625	7185	9075	
2750	4310	4735		5500	7060	8950	
2625	4185	4485		5375	6935	8825	
2500	4060	4235		5250	6810	8700	
2375	3935	3985		5125	6685	8575	

Notices:
- Observe the permissible size ranges of the door types on pages 9 – 14 and 17 – 25 under all circumstances!
- ALR 67 Thermo Glazing on request.

All door types available in any version.

Door types APU 67 Thermo and ALR 67 Thermo on request.

All door types with wicket door on request.

Door type SPU 67 Thermo on request (APU 67 Thermo and ALR 67 Thermo not possible).

All door types on request.

Dimensions in mm

Track application: RD

High-lift track application

with low-mounted torsion spring shaft and inclination up to max. 30°

Detailed technical data can be found in the product configurator.

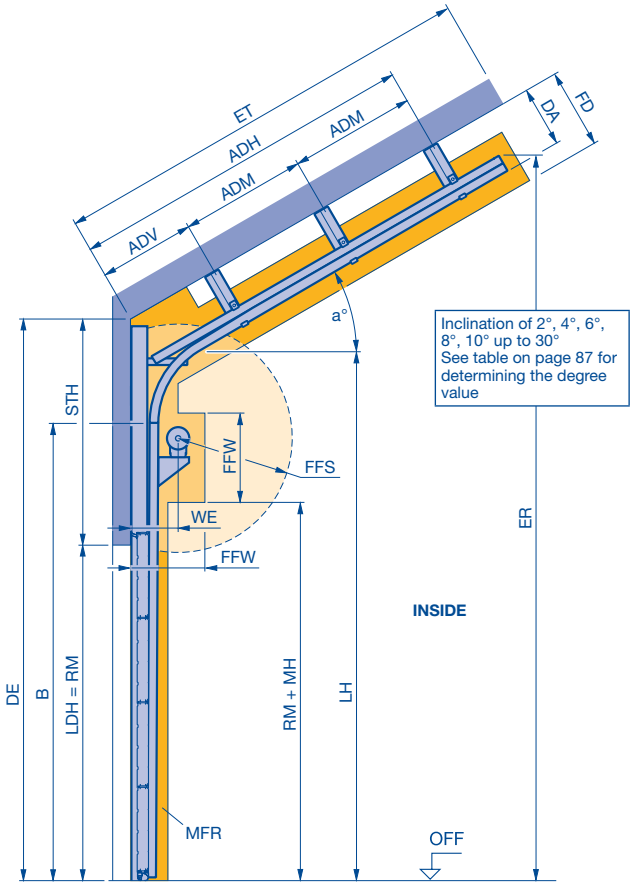

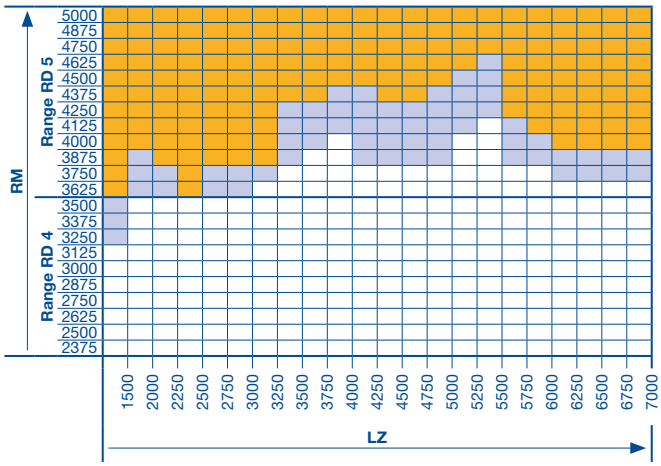

a°	Inclination
ADH	Distance to rear ceiling anchor
ADM	Distance to central ceiling anchor
ADV	Distance to front ceiling anchor
B	Start of double radius
DA	Distance to ceiling on request
DE	Min. ceiling height
ER	Top edge corner point Track height (depth and height)
ET	Min. distance back
FD	Ceiling clearance
FFS	Spring compression clearance
FFW	Spring shaft clearance
LDB	Clear passage width with ThermoFrame (see page 62)
LDH	Clear passage height
LH	Track height
LZ	Clear frame dimensions **(from 1200)**
MFR	Space for fitting the door
MH	Fitting height
OFF	Finished floor level (FFL)
RM	Grid height
STH	Min. headroom
WE	Shaft centre from lintel

Please note:
Select required track height according to the door height in the table on page 53.

Notice:
- The validity tables with the size range shown are based on the standard door type version (see product description). In case of deviations, the valid size ranges in the product configurator must be taken into account.
- The clearance required for fitting the door must be free of supply lines, heater fans, etc.

Notices:
- Observe the permissible size ranges of the door types on pages 9 – 14 and 17 – 25 under all circumstances!
- ALR 67 Thermo Glazing and doors with wicket door on request.
- To determine the roof slope see page 87.
- Inclination > 10° to 30° on request.

Observe the min. sideroom, see page 62.

	WE	FFW	STH	DA	DE
RD 4	335	500 × 850	1775	**	STH + RM
RD 5	355	540 × 850			

B	FFS	FD	ET	ER	MH
LH – 513	Min. 90° (745)	DA + 65	**	**	400

** Dimensions can be found in the product configurator.

All door types available in any version.

Door types APU 67 Thermo and ALR 67 Thermo on request.

All door types on request.

All door types and versions on request.

Dimensions in mm

Track application: RS

High-lift track application

with double radius and low-mounted torsion spring shaft

Detailed technical data can be found in the product configurator.

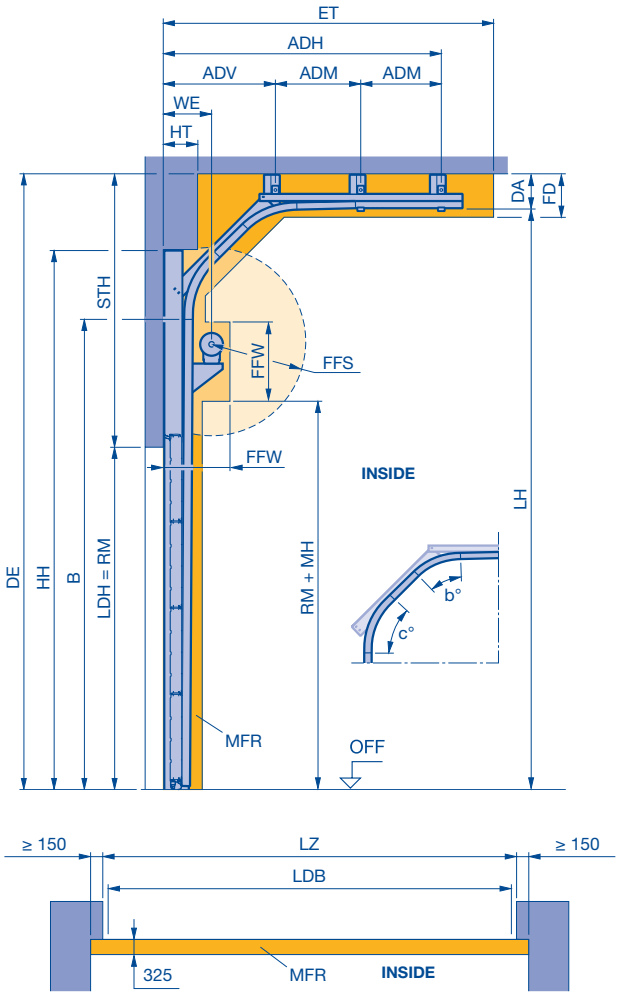

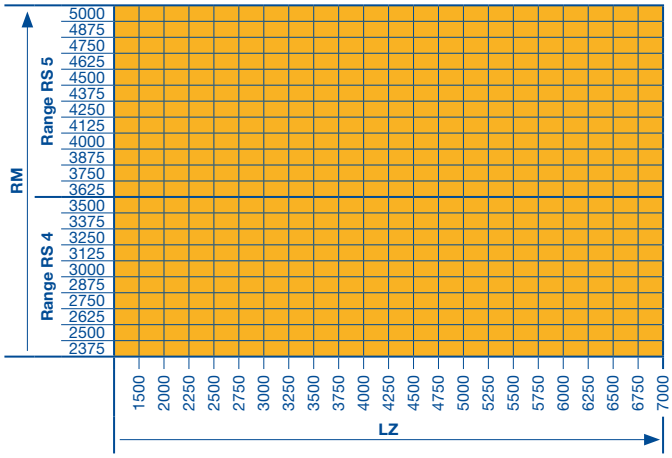

b°/c°	Contour angle	**HT**	Obstruction depth
ADH	Distance to rear ceiling anchor	**LDB**	Clear passage width with ThermoFrame (see page 62)
ADM	Distance to central ceiling anchor	**LDH**	Clear passage height
ADV	Distance to front ceiling anchor	**LH**	Track height
B	Start of double radius, factory specification	**LZ**	Clear frame dimensions **(from 1200)**
DA	Distance to ceiling on request	**MFR**	Space for fitting the door
DE	Min. ceiling height	**MH**	Fitting height
ET	Distance back	**OFF**	Finished floor level (FFL)
FD	Ceiling clearance	**RM**	Grid height
FFS	Spring compression clearance	**STH**	Min. headroom
FFW	Spring shaft clearance	**WE**	Shaft centre from lintel
HH	Obstruction height		

Please note:
Select required track height according to the door height in the table on page 53.

Notice:
- A technical inspection is required!
- The validity tables with the size range shown are based on the standard door type version (see product description). In case of deviations, the valid size ranges in the product configurator must be taken into account.
- The clearance required for fitting the door must be free of supply lines, heater fans, etc.

Notices:
- Observe the permissible size ranges of the door types on pages 9 – 14 and 17 – 25 under all circumstances!
- ALR 67 Thermo Glazing on request.

Observe the min. sideroom, see page 62.

	WE	FFW	STH	DA	DE
RS 4	335	500 × 850	1477	203	LH + 183
RS 5	355	540 × 850			

B	FFS	FD	ET	ER	MH
**	Min. 90° (745)	DA + 65	**	**	400

** Dimensions can be found in the product configurator.

All door types and versions on request.

Dimensions in mm

Track application: RK

High-lift track application
with double radius and inclination up to max. 30°

Detailed technical data can be found in the product configurator.

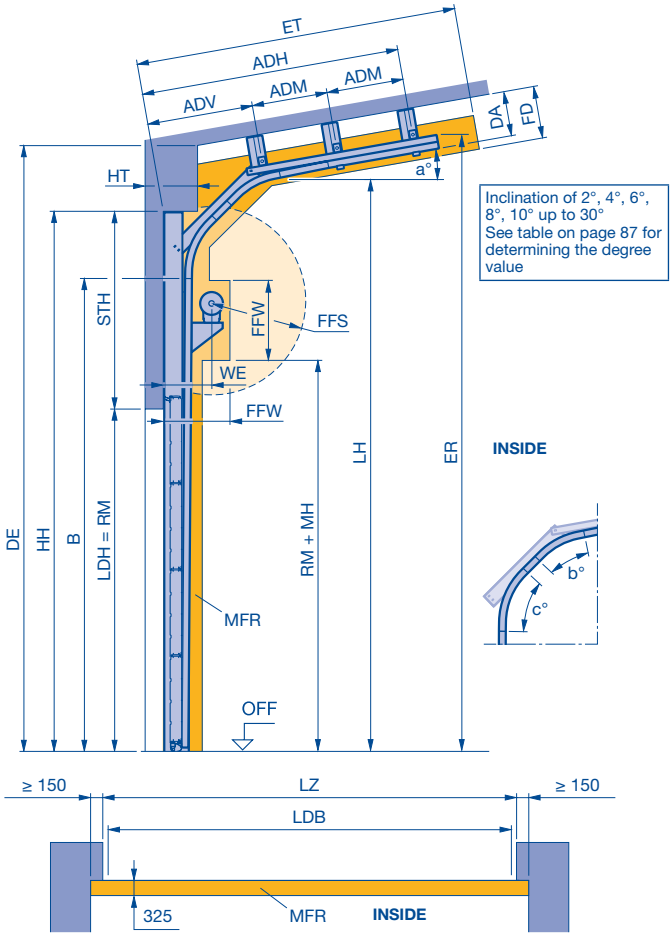

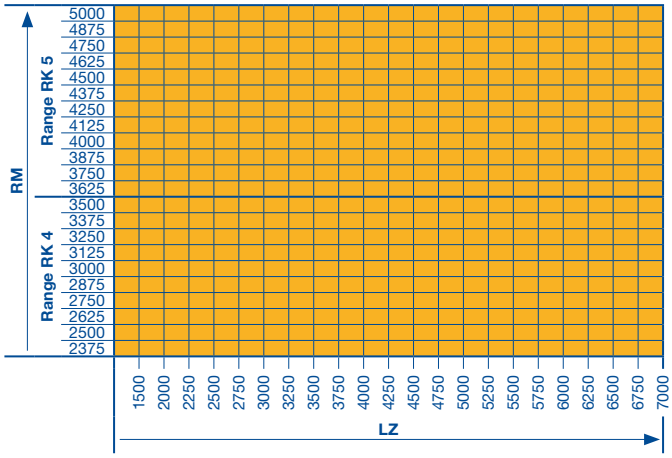

a°	Inclination
b°/c°	Contour angle
ADH	Distance to rear ceiling anchor
ADM	Distance to central ceiling anchor
ADV	Distance to front ceiling anchor
B	Start of double radius, factory specification
DA	Distance to ceiling on request
DE	Min. ceiling height
ER	Top edge corner point Track height (depth and height)
FD	Ceiling clearance
FFS	Spring compression clearance
FFW	Spring shaft clearance
HH	Obstruction height
HT	Obstruction depth
LDB	Clear passage width with ThermoFrame (see page 62)
LDH	Clear passage height
LH	Track height
LZ	Clear frame dimensions **(from 1200)**
MFR	Space for fitting the door
MH	Fitting height
OFF	Finished floor level (FFL)
RM	Grid height
STH	Min. headroom
WE	Shaft centre from lintel

Please note:
Select required track height according to the door height in the table on page 53.

Notice:
- A technical inspection is required!
- The validity tables with the size range shown are based on the standard door type version (see product description). In case of deviations, the valid size ranges in the product configurator must be taken into account.
- The clearance required for fitting the door must be free of supply lines, heater fans, etc.

Notices:
- Observe the permissible size ranges of the door types on pages 9 – 14 and 17 – 25 under all circumstances!
- ALR 67 Thermo Glazing on request.
- To determine the roof slope see page 87.
- Inclination > 10° to 30° on request.

Observe the min. sideroom, see page 62.

	WE	FFW	STH	DA	DE
RK 4	335	500 × 850	1477	203	LH + 183
RK 5	355	540 × 850			

B	FFS	FD	ET	ER	MH
**	Min. 90° (745)	DA + 65	**	**	400

** Dimensions can be found in the product configurator.

All door types and versions on request.

Dimensions in mm

Track application: V

Vertical track application

Detailed technical data can be found in the product configurator.

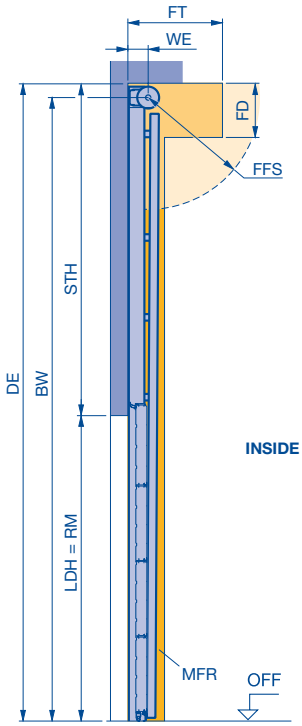

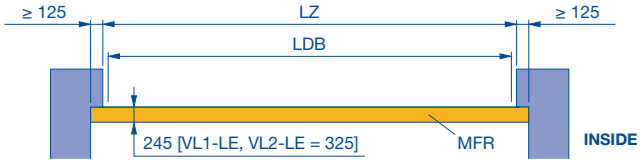

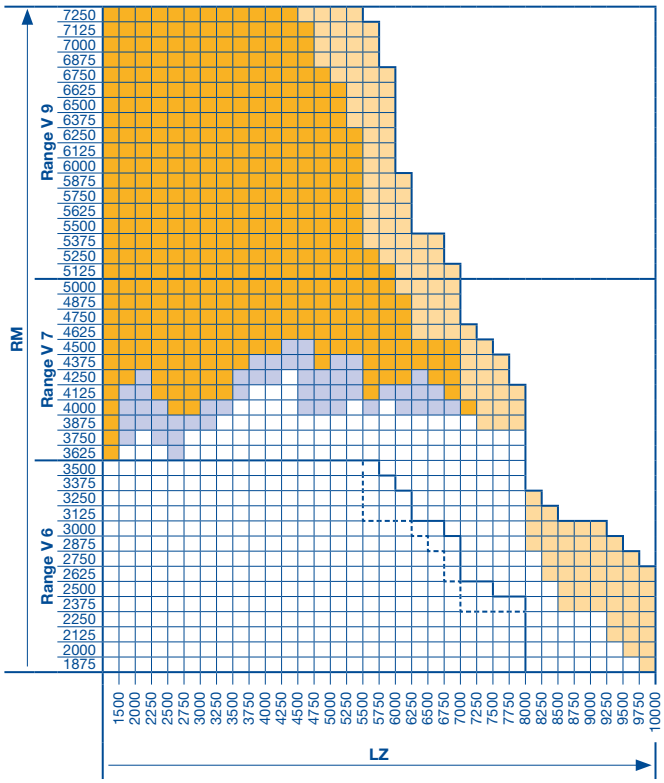

BW	Position of shaft support	**LDH**	Clear passage height
DE	Min. ceiling height	**LZ**	Clear frame dimensions **(from 1200)**
FD	Min. ceiling clearance	**MFR**	Space for fitting the door
FFS	Spring compression clearance	**OFF**	Finished floor level (FFL)
FT	Clearance for door operation	**RM**	Grid height
LDB	Clear passage width with ThermoFrame (see page 62)	**WE**	Shaft centre from lintel
		STH	Min. headroom

Notices:

- The validity tables with the size range shown are based on the standard door type version (see product description). In case of deviations, the valid size ranges in the product configurator must be taken into account.
- The clearance required for fitting the door must be free of supply lines, heater fans, etc.
- Observe the permissible size ranges of the door types on pages 9 – 14 and 17 – 25 under all circumstances!
- ALR 67 Thermo Glazing and doors with wicket door on request.

Observe the min. sideroom, see page 62.

	STH	WE	DE	BW
V 6	RM + 560	160	2 × RM + 560	2 × RM + 420
V 7	RM + 600 (790*)	180	2 × RM + 600 (790*)	2 × RM + 445
V 9	RM + 695 (840*)	205	2 × RM + 695 (840*)	2 × RM + 495

* with double spring shaft

FD	FFS	FT
500	Min. 90° (745)	2 × WE

Track limit

Track limit for APU 67 Thermo and ALR 67 Thermo.

All door types available in any version.

Door types APU 67 Thermo and ALR 67 Thermo on request.

Door type SPU 67 Thermo on request (APU 67 Thermo and ALR 67 Thermo not possible).

All door types on request.

Dimensions in mm

Track application: VA

Vertical track application
with high-mounted torsion spring shaft

Detailed technical data can be found in the product configurator.

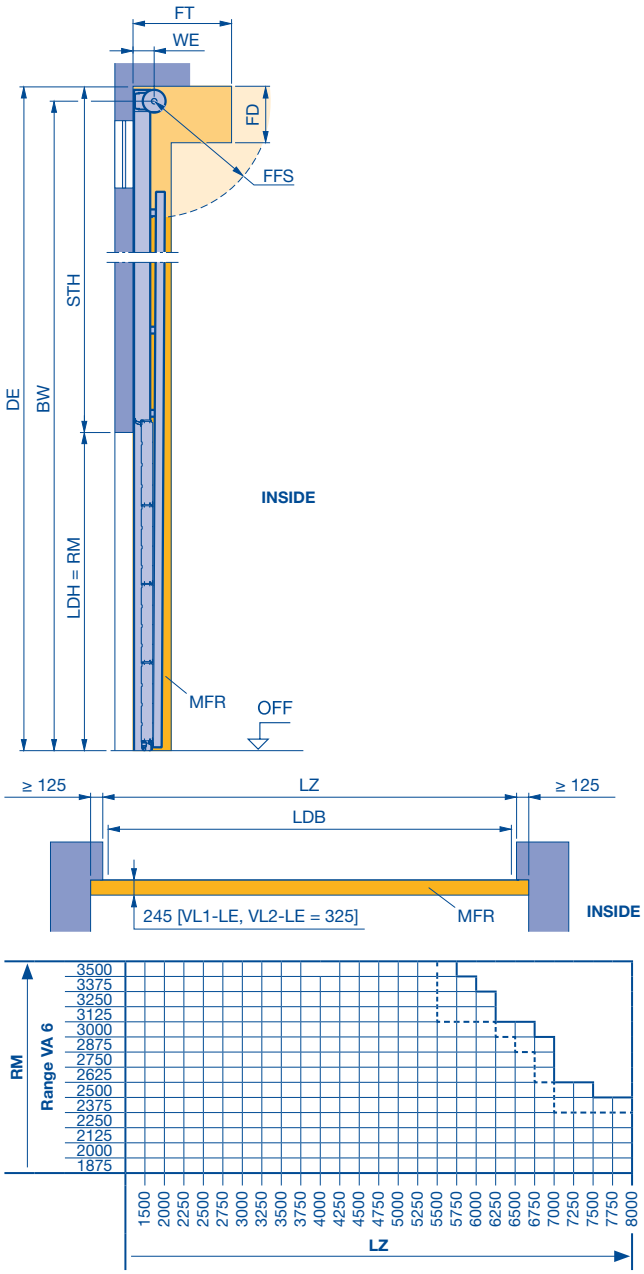

BW	Position of shaft support	**LDH**	Clear passage height
DE	Min. ceiling height	**LZ**	Clear frame dimensions **(from 1200)**
FD	Ceiling clearance	**MFR**	Space for fitting the door
FFS	Spring compression clearance	**OFF**	Finished floor level (FFL)
FT	Clearance for door operation	**RM**	Grid height
LDB	Clear passage width with ThermoFrame (see page 62)	**STH**	Min. headroom
		WE	Shaft centre from lintel

Notices:

- The validity tables with the size range shown are based on the standard door type version (see product description). In case of deviations, the valid size ranges in the product configurator must be taken into account.
- The clearance required for fitting the door must be free of supply lines, heater fans, etc.
- Observe the permissible size ranges of the door types on pages 9 – 14 and 17 – 25 under all circumstances!

Observe the min. sideroom, see page 62.

	STH	DE	BW	WE	FD	FFS	FT
VA 6	RM + 570	BW + 140	Min. 2 × RM + 430 Max. DE – 140 (7895)	160	500	min. 90° (745)	2 × WE

Notice:
ALR 67 Thermo Glazing and doors with wicket door on request.

Track limit

Track limit for APU 67 Thermo and ALR 67 Thermo.

All door types available in any version.

Dimensions in mm

Track application: VS

Vertical track application

With inclination

Detailed technical data can be found in the product configurator.

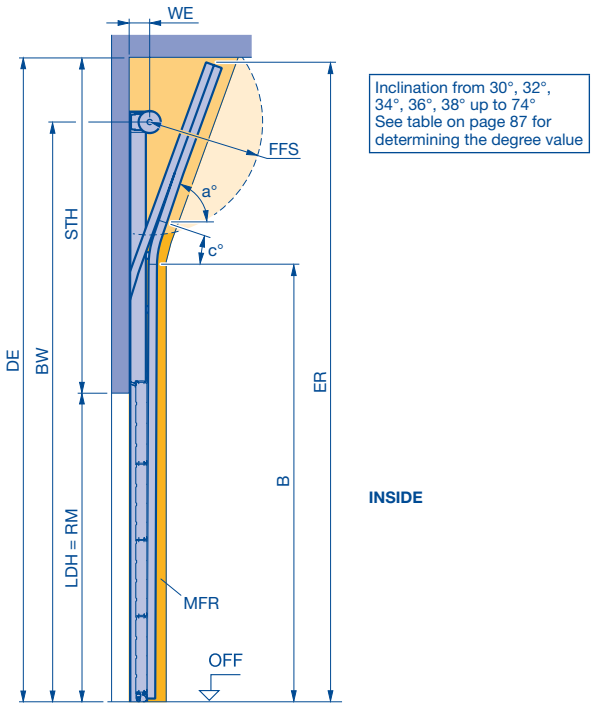

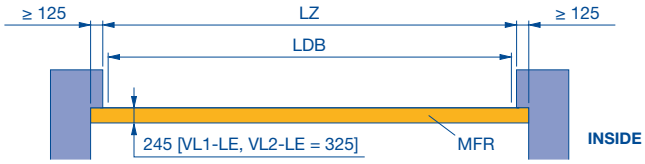

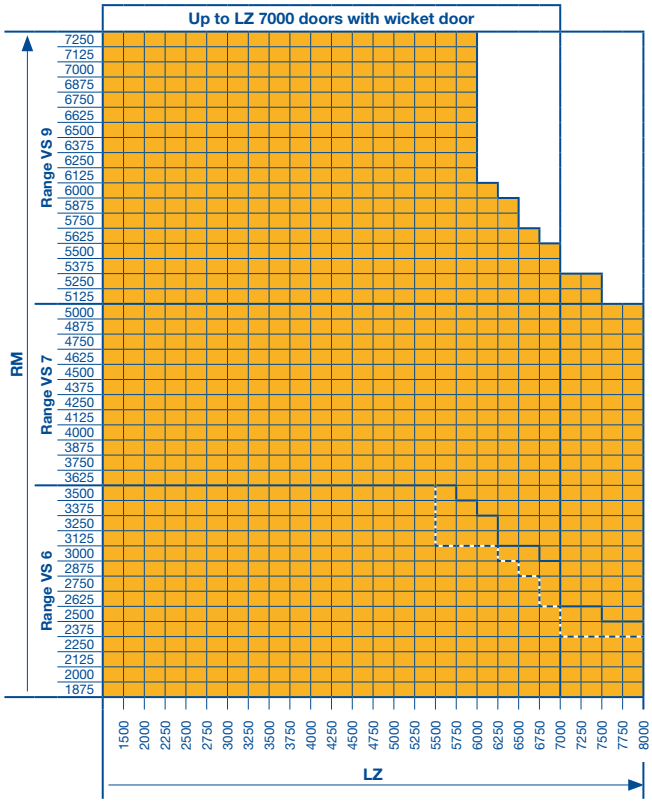

a°	Inclination	**LDH**	Clear passage height
c°	Contour angle	**LZ**	Clear frame dimensions **(from 1200)**
B	Start of double radius	**MFR**	Space for fitting the door
BW	Position of shaft support	**OFF**	Finished floor level (FFL)
DE	Min. ceiling height	**RM**	Grid height
ER	Top edge corner point Track height (depth and height)	**STH**	Min. headroom
FFS	Spring compression clearance	**WE**	Shaft centre from lintel
LDB	Clear passage width with ThermoFrame (see page 62)		

Notices:

- The validity tables with the size range shown are based on the standard door type version (see product description). In case of deviations, the valid size ranges in the product configurator must be taken into account.
- A technical inspection is required!
- The clearance required for fitting the door must be free of supply lines, heater fans, etc.
- Observe the permissible size ranges of the door types on pages 9 – 14 and 17 – 25 under all circumstances!

Observe the min. sideroom, see page 62.

	STH	DE	B	BW	WE	FFS	ER
VS 6	On request	On request	Min. RM + 20 max. 2 × RM – 1075	**	160	min. 90° (745)	On request
VS 7					180		
VS 9					205		

** Dimensions can be found in the product configurator.

Notice:
ALR 67 Thermo Glazing and doors with wicket door on request.

Track limit

Track limit for APU 67 Thermo and ALR 67 Thermo.

All door types on request.

Dimensions in mm

Track application: VU

Vertical track application
with low-mounted torsion spring shaft

Detailed technical data can be found in the product configurator.

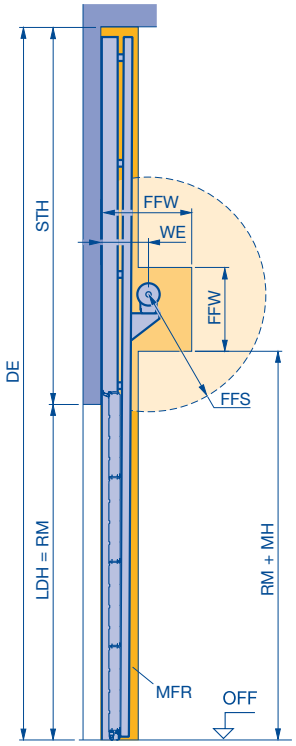

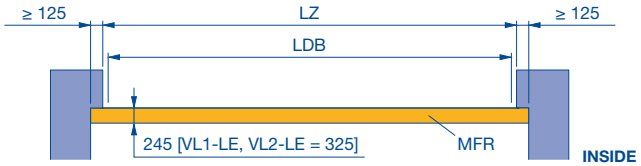

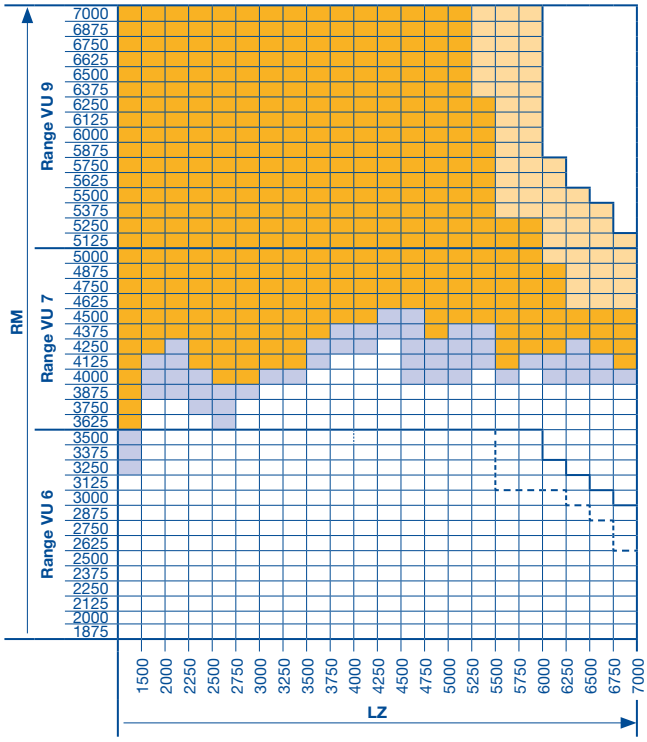

DE	Min. ceiling height	**MFR**	Space for fitting the door
FFW	Spring shaft clearance	**MH**	Fitting height
FFS	Spring compression clearance	**OFF**	Finished floor level (FFL)
LDB	Clear passage width with ThermoFrame (see page 62)	**RM**	Grid height
LDH	Clear passage height	**STH**	Min. headroom
LZ	Clear frame dimensions **(from 1200)**	**WE**	Shaft centre from lintel

Notices:

- The validity tables with the size range shown are based on the standard door type version (see product description). In case of deviations, the valid size ranges in the product configurator must be taken into account.
- The clearance required for fitting the door must be free of supply lines, heater fans, etc.
- Observe the permissible size ranges of the door types on pages 9 – 14 and 17 – 25 under all circumstances!

Observe the min. sideroom, see page 62.

	STH	DE	WE	FFS	MH	FFW
VU 6	RM + 330	STH + RM	335	Min. 90° (745)	400	500 × 850
VU 7			355			540 × 850
VU 9			395			620 × 850

Notice:
ALR 67 Thermo Glazing and doors with wicket door on request.

Track limit

Track limit for APU 67 Thermo and ALR 67 Thermo.

All door types available in any version.

Door types APU 67 Thermo and ALR 67 Thermo on request.

Door type SPU 67 Thermo on request (APU 67 Thermo and ALR 67 Thermo not possible).

All door types on request.

Dimensions in mm

Track application: WS

Vertical track application
with inclination and low-mounted torsion spring shaft

Detailed technical data can be found in the product configurator.

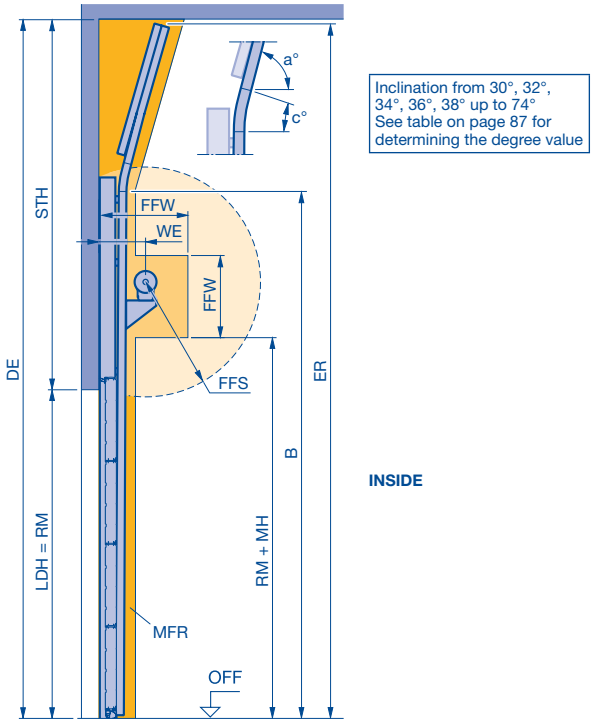

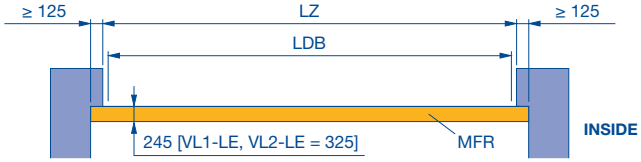

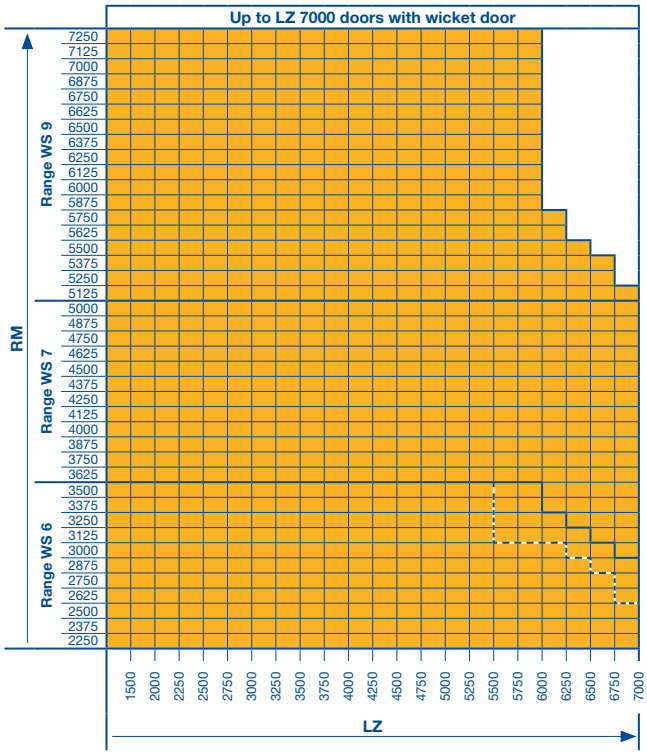

a°	Inclination
c°	Contour angle
B	Start of double radius
DE	Min. ceiling height
ER	Top edge corner point Track height (depth and height)
FD	Ceiling clearance
FFW	Spring shaft clearance
FFS	Spring compression clearance
LDB	Clear passage width with ThermoFrame (see page 62)
LDH	Clear passage height
LZ	Clear frame dimensions **(from 1200)**
MFR	Space for fitting the door
MH	Fitting height
OFF	Finished floor level (FFL)
RM	Grid height
STH	Min. headroom
WE	Shaft centre from lintel

Notices:

- The validity tables with the size range shown are based on the standard door type version (see product description). In case of deviations, the valid size ranges in the product configurator must be taken into account.
- A technical inspection is required!
- The clearance required for fitting the door must be free of supply lines, heater fans, etc.
- Observe the permissible size ranges of the door types on pages 9 – 14 and 17 – 25 under all circumstances!

Observe the min. sideroom, see page 62.

	WE	FFW	STH	B	DE	FFS	MH	ER
WS 6	335	500 × 850	On request	Min. RM + 1200 max. 2 × RM – 1000	On request	Min. 90° (745)	400	On request
WS 7	355	540 × 850						
WS 9	395	620 × 850						

** Dimensions can be found in the product configurator.

All door types and versions on request.

Track limit

Track limit for APU 67 Thermo and ALR 67 Thermo.

Dimensions in mm

Sideroom

Required sideroom

Track application / designation	SA	Track application / designation		SA
N*, NA, ND*, NH*, NS, NK, GD, V, VA, VU, GK, GS, VS, WS	125	Hand pulley	N, NA, ND, NH, NS, GD, NK, GS, GK	140
H, HA, HD, HU, RD, HK, HS, RS, RK	150		H, HA, HD, HU, RD, HK, HS, RS, RK	150
L, LD	125		V, VA, VU, VS,WS	125
With use of the C-rail (page 68 – 69)	170	Chain hoist		Page 66
		Shaft operators		Pages 71 – 80

* The sideroom changes due to the track application range (see pages 52 – 60).

Sideroom

ThermoFrame version

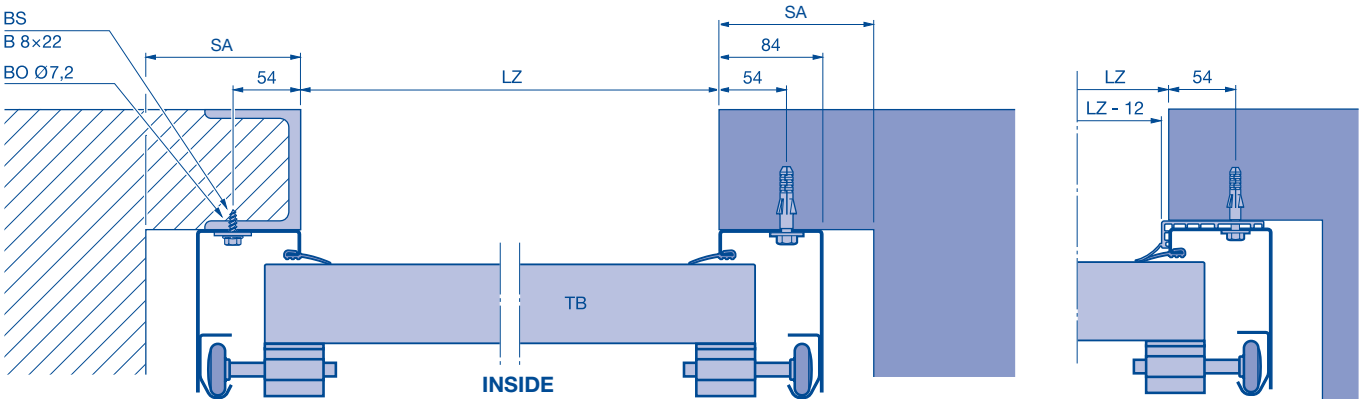

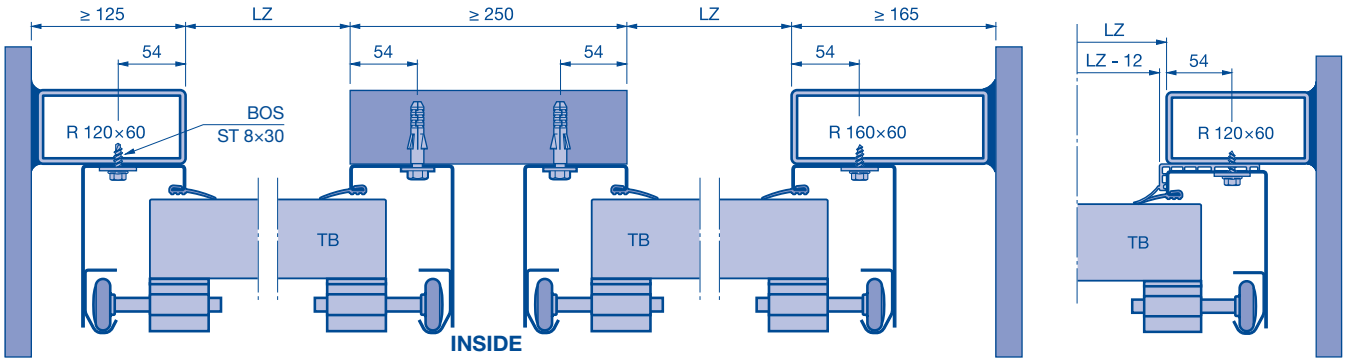

Sideroom with frame covering

ThermoFrame version

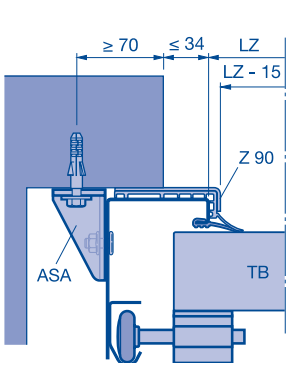

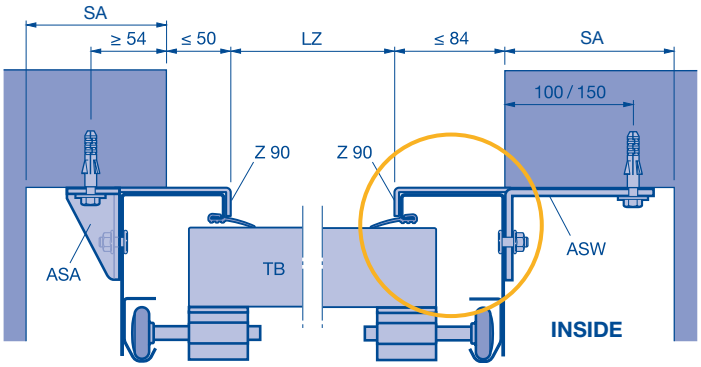

ThermoFrame version

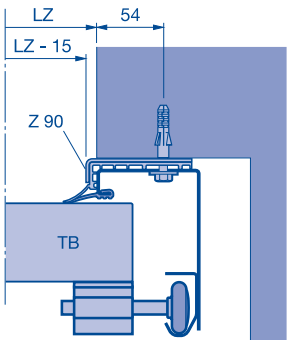

Notice:
Clear frame in the opening is not possible with RC 2.

LZ	Clear frame dimension	**HS**	self-tapping screw	**SA**	Sideroom
BO	Hole	**TB**	Door leaf	**ASA**	Screw-on anchor 70 × 40
BOS	drilling screw	**R**	Box section	**ASW**	Screw-on bracket 70 × 120 / 170

Spacer profile

Clearance to the lintel

Sideroom

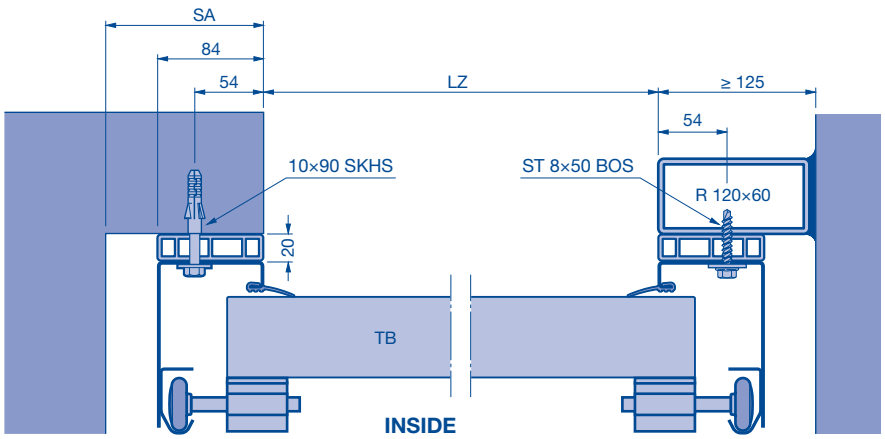

Lintel counter seal

Fitting to brickwork

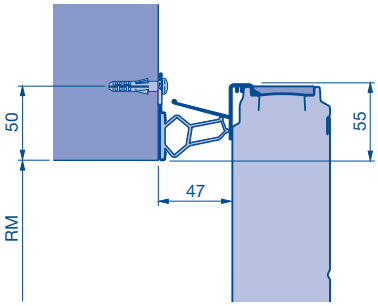

Box section fitting (120, 160, 200)

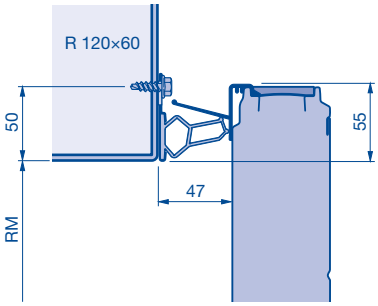

Thermoframe sideroom

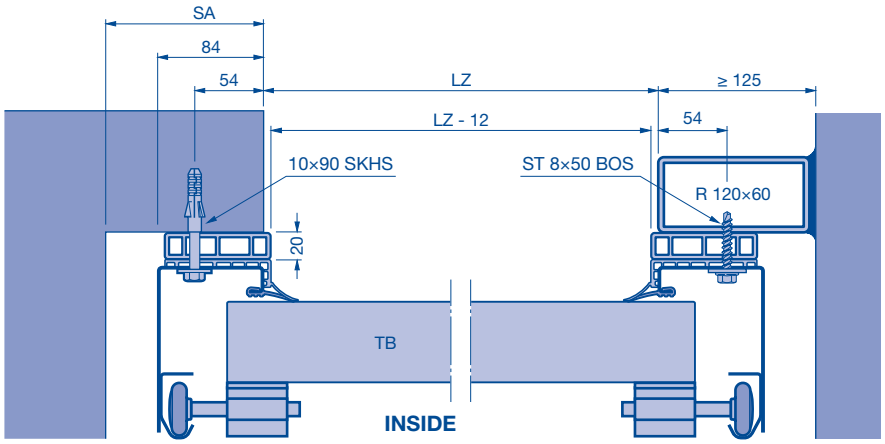

ThermoFrame lintel counter seal

Fitting to brickwork

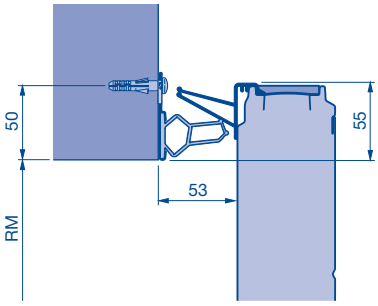

Box section fitting (120, 160, 200)

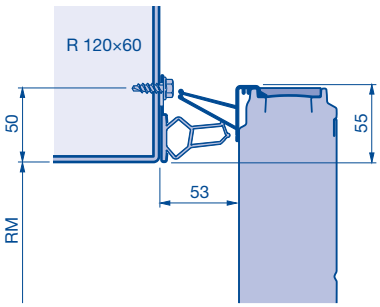

Notice:
Door versions with facade door, panels or frame covering as well as frame fitting with screw-on bracket are not possible.

BOS	drilling screw	**SA**	Sideroom
LZ	Clear frame dimension	**SKHS**	Hexagon wood screw
R	Box section	**TB**	Door leaf
RM	Grid		

Lintel fittings

Normal lintel fitting
Insufficient headroom up to 30 mm high

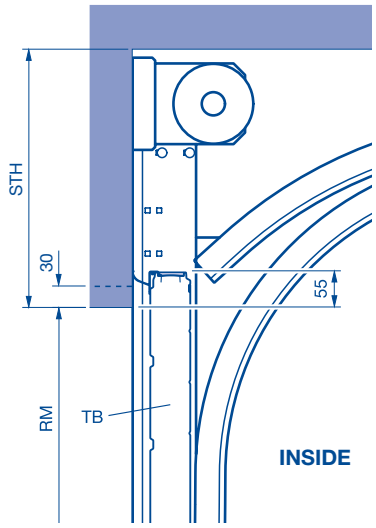

Normal lintel fitting
Double spring shaft

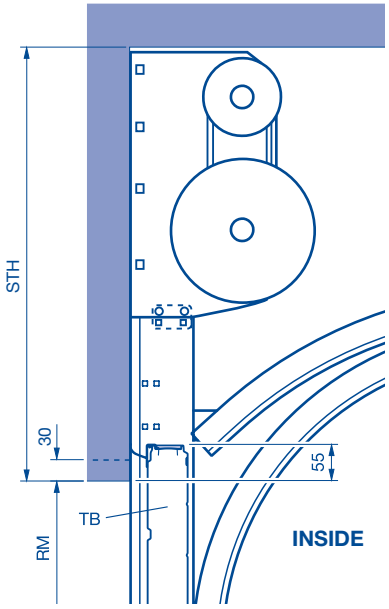

Single-skinned steel fascia for SPU 67 Thermo to make up for insufficient headroom up to 125 mm height and LZ ≤ 8000 mm
(only for track application N)

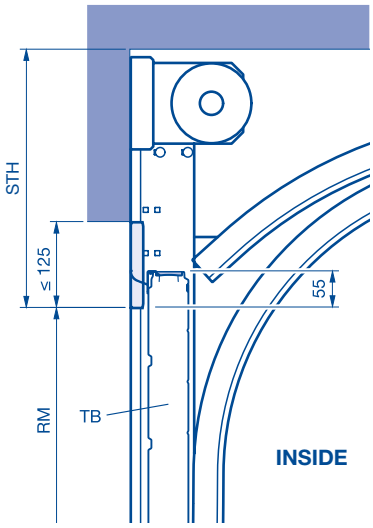

Smooth panel, anodised, for APU 67 Thermo, ALR 67 Thermo and ALR 67 Thermo Glazing to make up for insufficient headroom from 31 to 190 mm and LZ ≤ 7000 mm (only for track application N)

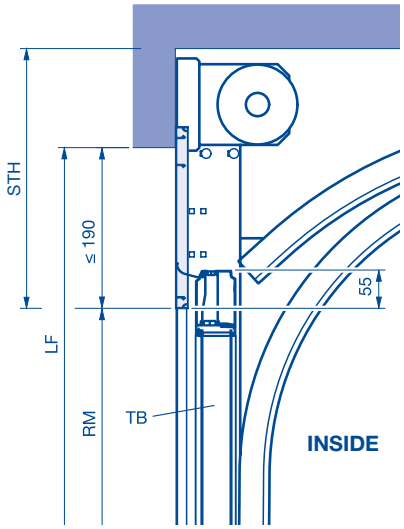

PU fascia panel to make up for insufficient headroom from 125 mm Aluminium fascia profile to make up for insufficient headroom (see table)

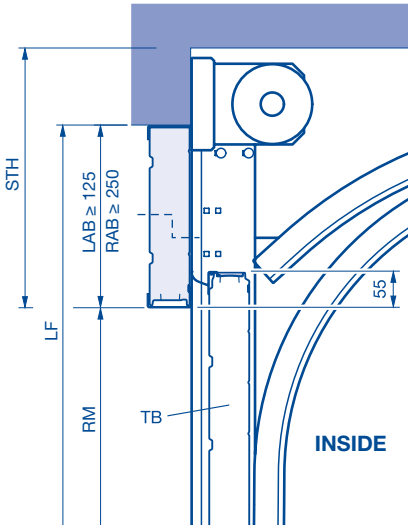

Fitting clearance for multiple-point locking

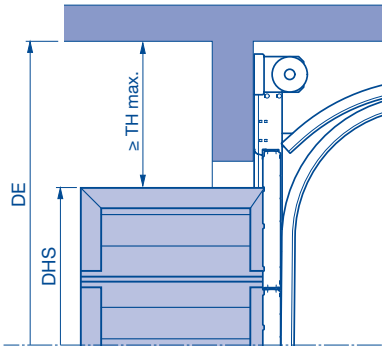

Lintel fitting with ThermoFrame

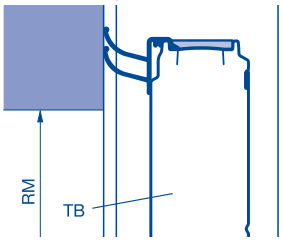

Aluminium fascia panels	
Height	**Infill type**
≥ 250	FU, XU, S3, S4, U3, U4, A3, A4, B3, B4, M3, M4, C3, C4

- Aluminium frame fascia panel with real glass infill E2 and G2 on request.

STH Min. headroom (see page 37)
DHS Wicket door clear passage height
RM Grid height
TB Door leaf
TH Door section height
LAB Fascia panel
RAB Fascia panel
LF Structural opening
LZ Clear frame dimension

Bottom edge

without wicket door / with wicket door and threshold rail	with wicket door and trip-free threshold

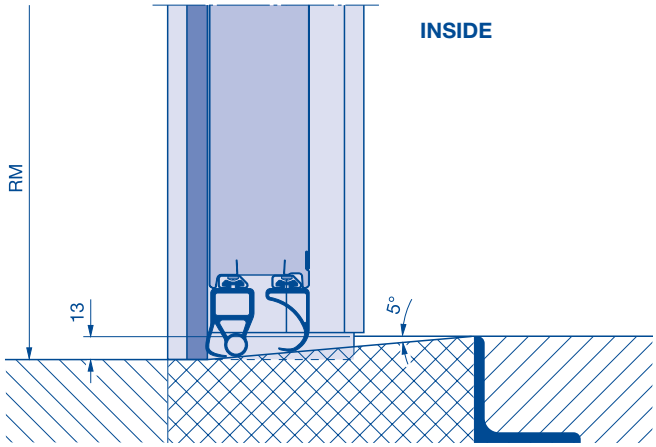

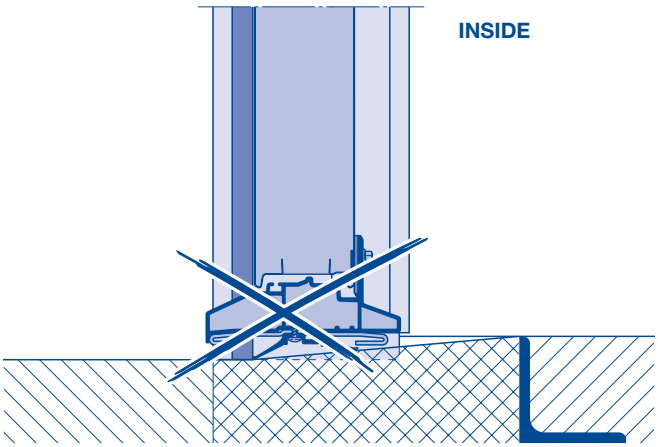

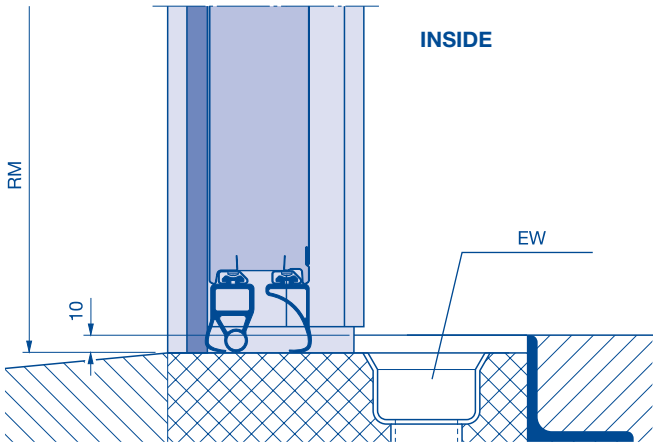

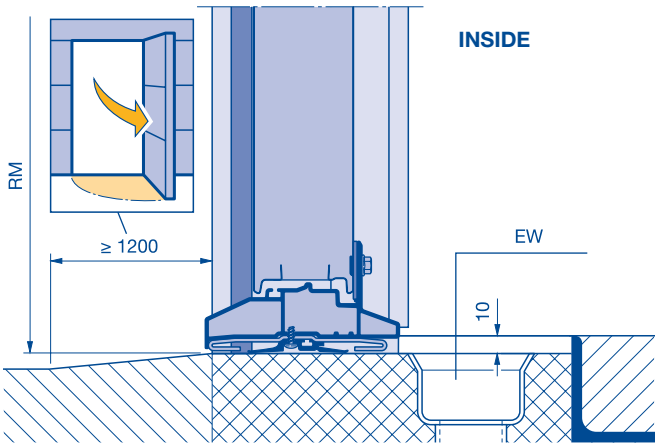

EW Drainage
RM Grid height

Chain hoist

Chain hoist for all track applications except HU, RD, RS, RK, VU, WS

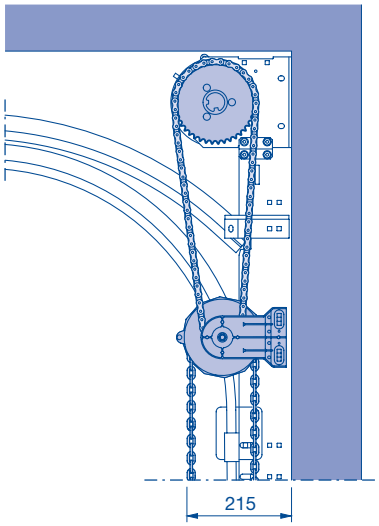

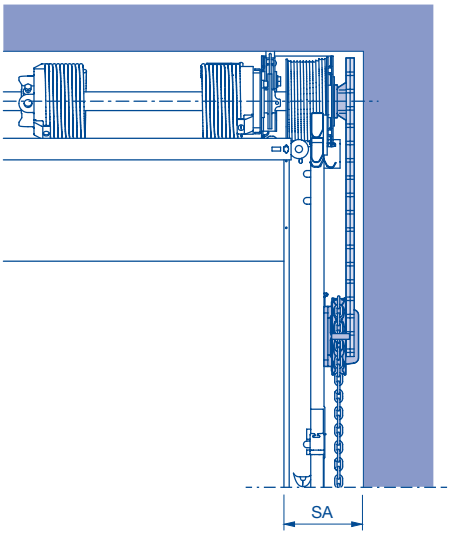

Track application	N, NA, ND, NS, NK	NH, GD, GS, GK	L, LD	H, HA, HD, HS, HK	V, VA, VS
SA	165	165	165	185	165

Chain hoist for track applications HU, RD, RS, RK, VU, WS

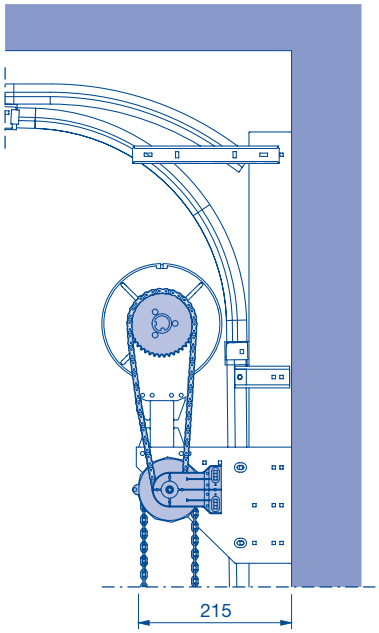

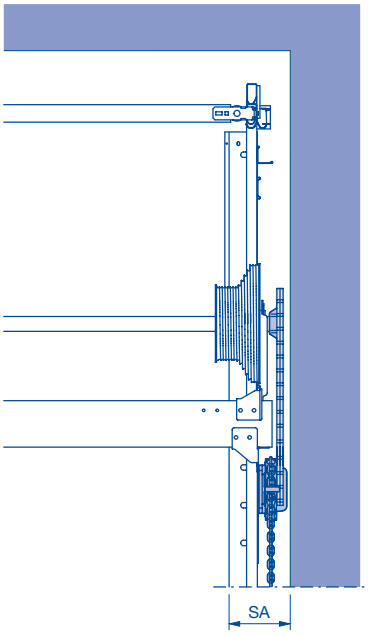

Track application	HU, RD, RS, RK	VU, WS
SA	185	185

SA Sideroom

Hand pulley

With rope or link steel chain

Track applications up to 20 m² door surface

With rope or link steel chain

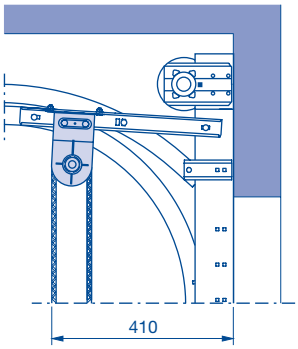

N, NA, ND, NH, NS, GD, H, HA, HD, HU, RD

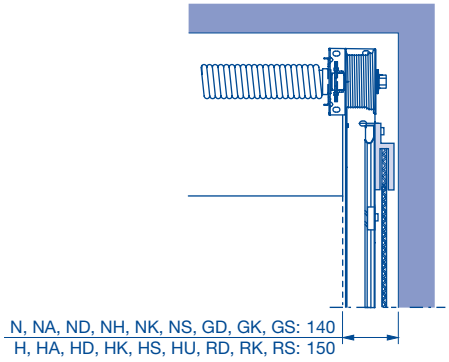

With rope or link steel chain

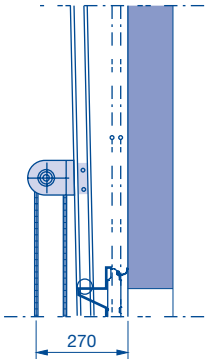

V, VA, VS

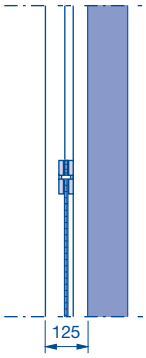

With rope or link steel chain

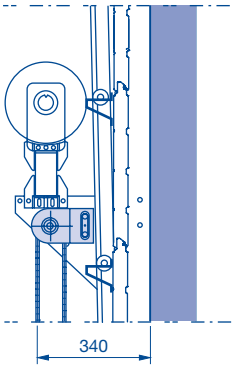

VU, WS

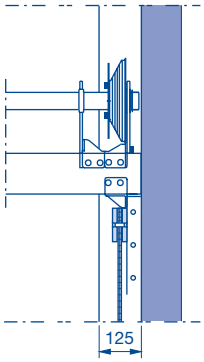

Ceiling anchors

Double track

Track suspensions for all track applications except V, VA, VS, VU and WS

Door weights for roof loads (see pages 37 – 47).

Double track (suspensions), door heights RM ≤ 5000

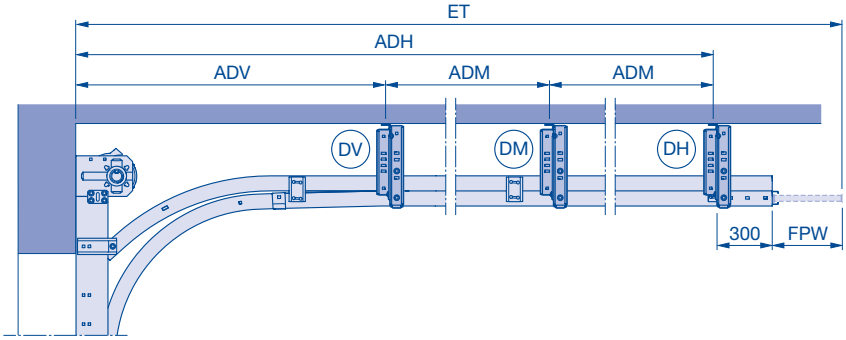

Notices:

- Detailed technical data can be found in the product configurator.
- On-site fastening elements must be able to withstand forces of up to 1.5 kN per fixing point!
- Always obtain the permission of the structural engineer before fastening the door system to supporting structural elements.
- Deviations may occur due to the simplified calculation of the distance back. Detailed technical data can be found in the product configurator.

Double track (suspensions) for track application L

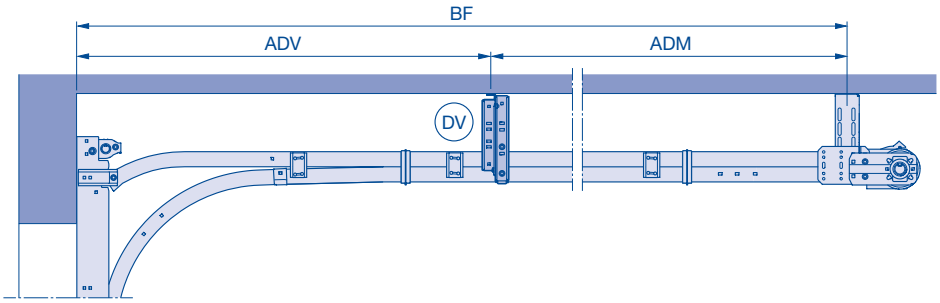

Track suspensions with double track

Track application	LZ	ET	Number of suspensions per side	DV	DM	DH / BF	ADV	ADM	ADH / BF	FPW
N, NA	≤ 7000	2289 – 3934	2	1	0	1	1400	–	ET – 597	Long
									ET – 327	Short
		3935 – 5685	3	1	1	1	1400	(ET – ADV – 597) / 2	ET – 597	Long
								(ET – ADV – 327) / 2	ET – 327	Short
	> 7000	2289 – 2934	2	1	0	1	1400	–	ET – 597	Long
									ET – 327	Short
		2935 – 4060	3	1	1	1	1400	(ET – ADV – 597) / 2	ET – 597	Long
								(ET – ADV – 327) / 2	ET – 327	Short
		4061 – 5685	4	1	2	1	1400	(ET – ADV – 597) / 3	ET – 597	Long
								(ET – ADV – 327) / 3	ET – 327	Short
L	≤ 7000	2882 – 3540	2	1	0	1	1400	–	RM + 695	–
		3541 – 5666	3	1	1	1	1400	(BF – ADV) / 2		
		5667 – 6007	4	1	2	1	1400	(BF – ADV) / 3		
H, HA, HU	≤ 7000	1915 – 2201	1	0	0	1	–	–	ET – 597	Long
									ET – 327	Short
		2202 – 3982	2	1	0	1	1400	–	ET – 597	Long
									ET – 327	Short
		3983 – 5488	3	1	1	1	1400	(ET – ADV – 597) / 2	ET – 597	Long
								(ET – ADV – 327) / 2	ET – 327	Short
		5489 – 5719	4	1	2	1	1400	(ET – ADV – 327) / 3	ET – 327	Short
	> 7000	1915 – 2201	1	0	0	1	1400	–	ET – 597	Long
									ET – 327	Short
		2202 – 2991	2	1	0	1	1400	–	ET – 597	Long
									ET – 327	Short
		2991 – 3864	3	1	1	1	1400	(ET – ADV – 597) / 2	ET – 597	Long
								(ET – ADV – 327) / 2	ET – 327	Short
		3865 – 5219	4	1	2	1	1400	(ET – ADV – 597) / 3	ET – 597	Long
								(ET – ADV – 327) / 3	ET – 327	Short
NH, ND, GD, LD, HD, RD	Dimensions can be found in the product configurator									

ADH	Distance to rear ceiling anchor	**DA**	Distance to ceiling	**DV**	Ceiling anchor front
ADM	Distance to central ceiling anchor	**DAL**	Ceiling anchor length	**ET**	Min. distance back
ADV	Distance to front ceiling anchor	**DH**	Rear ceiling anchor	**FPW**	Spring buffer travel
BF	Position of spring shaft	**DM**	Centre ceiling anchor	**LZ**	Clear frame dimension

Ceiling anchors

C track

C-rail (suspensions) all track sizes except NS, NK, GS, GK, V, VA, VS, VU, WS

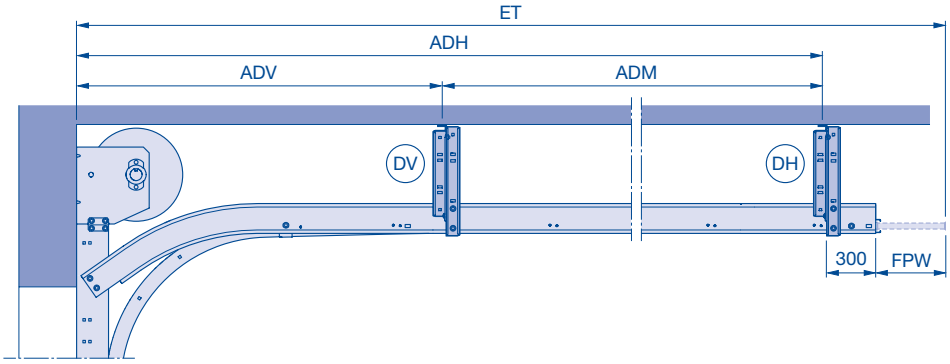

Notice:
Deviations may occur due to the simplified calculation of the distance back. Detailed technical data can be found in the product configurator.

All door types RM > 4500 and LZ > 6250, all door types RM > 5000 except for track application L / LD doors with real glass RM > 3500 and LZ > 5000

Track application	LZ	ET	Number of suspensions per side	DV	DM	DH / BF	ADV (max. 3000)	ADM	ADH / BF	FPW
N, NA	≤ 8000	≤ 6685	2	1	0	1	ADH / 2	–	ET – 597	Long
									ET – 327	Short
		> 6685	3	1	1	1	ADH / 3	(ET – ADV – 597) / 2	ET – 597	Long
								(ET – ADV – 327) / 2	ET – 327	Short
L	≤ 7000	≤ 6007	2	1	0	1	BF/2	–	RM + 695	–
H, HA, HU	≤ 8000	≤ 6739	2	1	0	1	ADH / 2	–	ET – 597	Long
									ET – 327	Short
		> 6739	3	1	1	1	ADH / 3	(ET – ADV – 597) / 2	ET – 597	Long
								(ET – ADV – 327) / 2	ET – 327	Short
NH, ND, GD, LD, HD, RD	Dimensions can be found in the product configurator									

Use of C-rail to reduce suspensions

Track application	LZ	ET	Number of suspensions per side	DV	DM	DH / BF	ADV (max. 3000)	ADM	ADH / BF	FPW
N, NA	≤ 5500	≤ 3810	1	0	0	1	–	–	ET – 597	Long
									ET – 327	Short
		> 3810	2	1	0	1	ADH / 2	–	ET – 597	Long
									ET – 327	Short
L		≤ 3541	1	0	0	1	–	–	–	–
		3542 – 5916	2	1	0	1	BF/2	–	RM + 695	
		> 5916	3	1	1	1	BF/3	(BF – ADV) / 2	RM + 695	
H, HA, HU		≤ 3740	1	0	0	1	–	–	ET – 597	Long
									ET – 327	Short
		> 3740	2	1	0	1	ADH / 2	–	ET – 597	Long
									ET – 327	Short
NH, ND, GD, LD, HD, RD	Dimensions can be found in the product configurator									

Track suspensions for distance to ceiling in seven lengths, standard length for DA = 375 mm

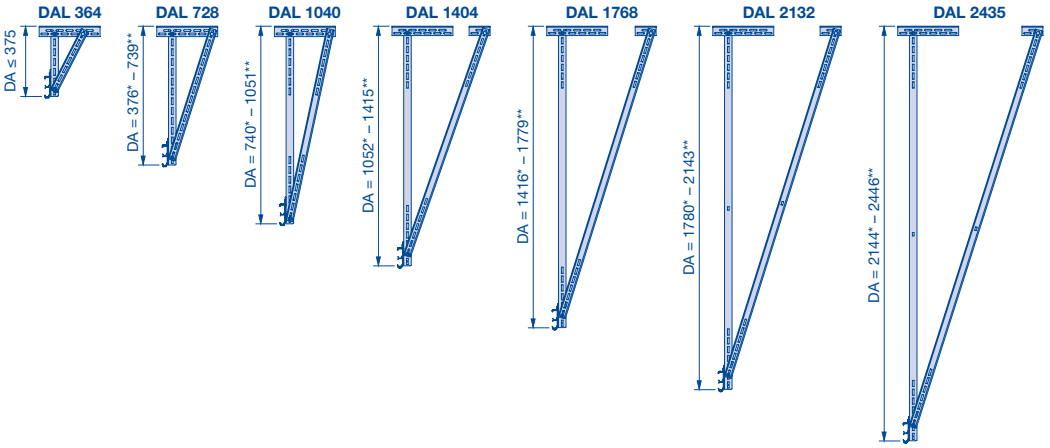

* min.
** Max.

ADH	Distance to rear ceiling anchor	**DA**	Distance to ceiling	**DV**	Ceiling anchor front
ADM	Distance to central ceiling anchor	**DAL**	Ceiling anchor length	**ET**	Min. distance back
ADV	Distance to front ceiling anchor	**DH**	Rear ceiling anchor	**FPW**	Spring buffer travel
BF	Position of spring shaft	**DM**	Centre ceiling anchor	**LZ**	Clear frame dimension

Diagonal strut

Detailed technical data can be found in the product configurator. Deviations may occur due to the simplified calculation of the distance back.

Please note:
A technical inspection is required!

Notices:
- Application range of LZ ≤ 3000 and RM ≤ 3250
- Max. distance back 2297
- Not for door type ALR 67 Thermo Glazing.

Track application H

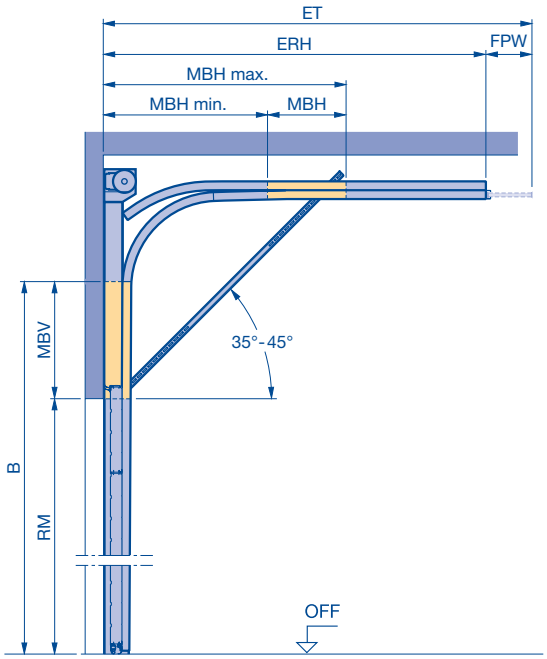

Other required technical data for track application H must be observed (see page 48).

Track application HU

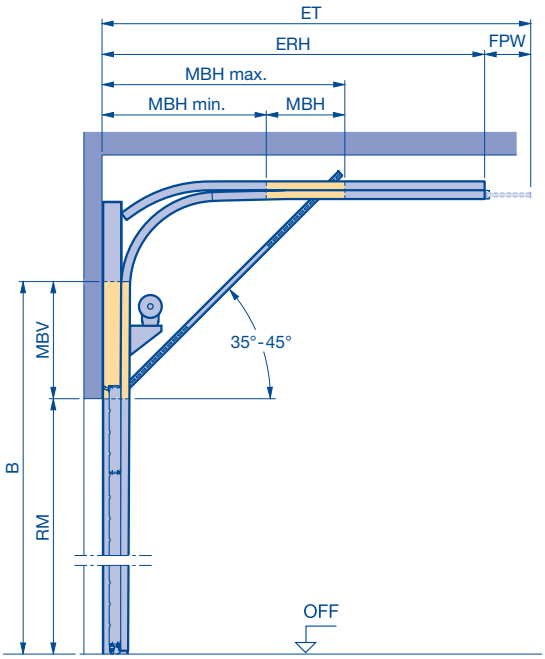

Further required technical data for track application HU must be observed (see page 53).

ET	ERH	Min. MBH	Max. MBH	FPW*		MBH	MBV		
				min.	Max.		Track application H		Track application HU
Max. 2297	ET – FPW (max. 2000)	ERH / 2	3 × ERH / 4	27	297	Max. MBH – min. MBH	RM Min. MBH	B Max. MBH	On request

* Dimensions can be found in the product configurator.

Connection door – door

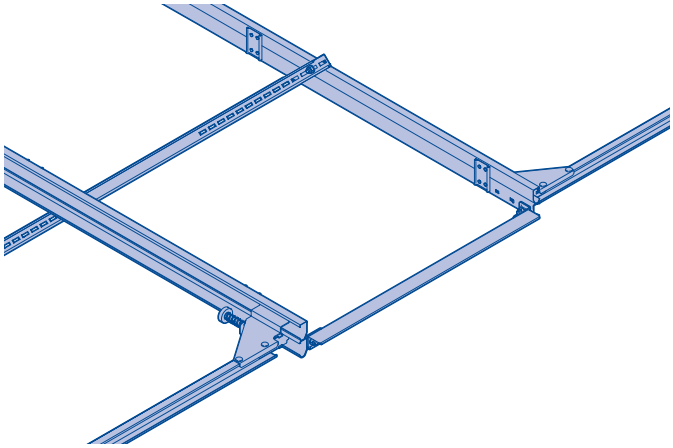

Connection door – wall

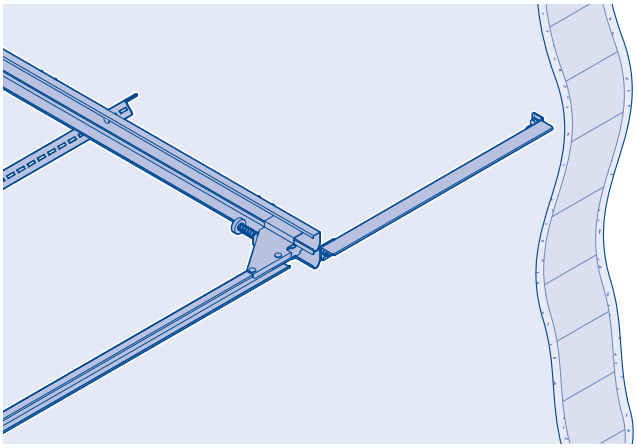

B Start of double radius
ET Min. distance back
ERH Corner point track horizontal
FPW Spring buffer travel
MBH Fitting area horizontal
MBV Fitting area vertical
OFF Finished floor level (FFL)
RM Grid height

Shaft operator WA 300

Shaft operator WA 300 for track applications N, NA, ND, NS, NH, NK, GD, GS, GK, H, HA, HD, HS, HK, V, VA and VS

As shown in the figure, the operator can be fitted either left or right, viewed from the inside.

Fitting example ⑧ right

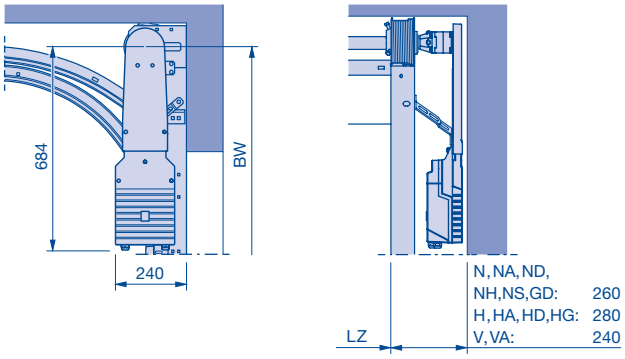

Fitting example ⑨ right

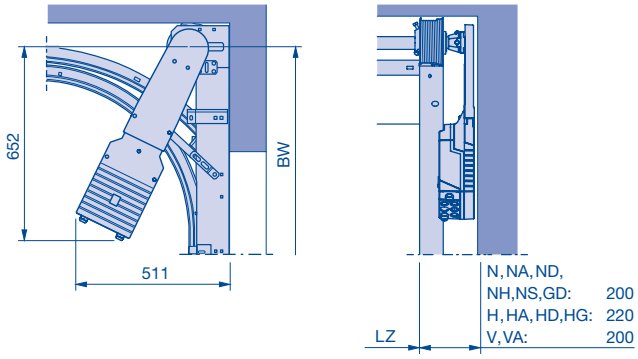

Shaft operator WA 300 for track applications L and LD

As shown in the figure, the operator can be fitted either left or right, viewed from the inside. **In fitting example 9: on the side opposite the door lock.**

Fitting example ⑧ right

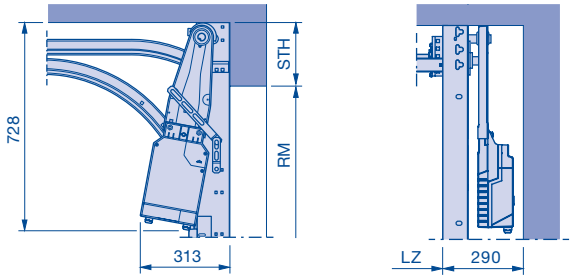

Fitting example ⑨ right

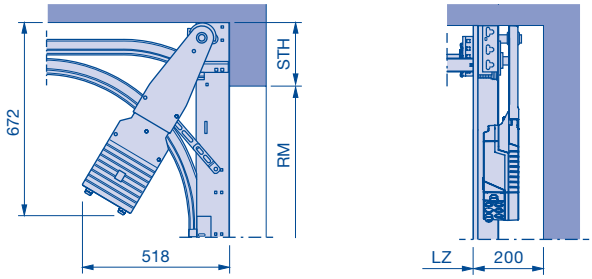

Shaft operator WA 300 for track applications HU, RD, RS, RK, VU and WS

As shown in the figure, the operator can be fitted either left or right, viewed from the inside.

Fitting example ⑧ right

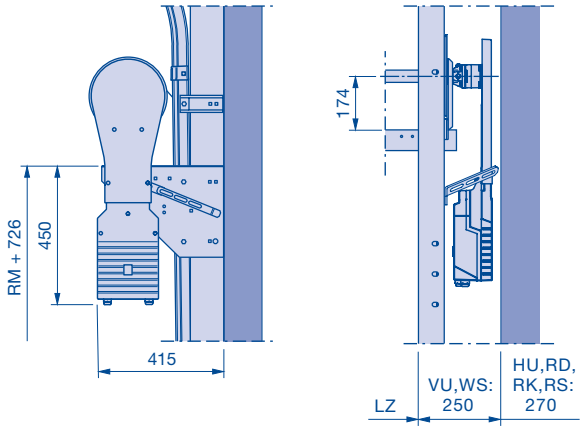

Fitting example ⑨ right

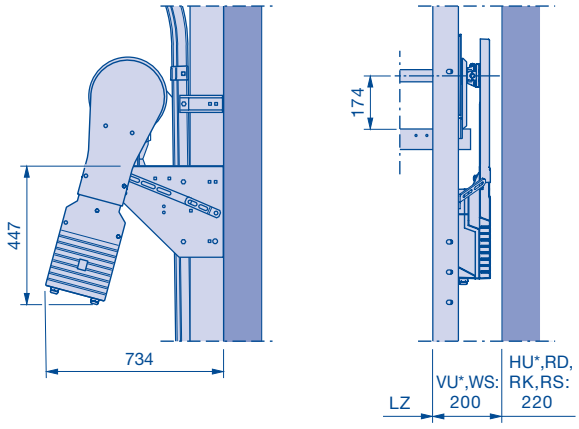

*** Notice:**
In the door range LZ ≤ 3000 and RM ≤ 3500 the track applications VU and HU are not possible

BW Position of shaft support
LZ Clear frame dimension

Shaft operator WA 300

Size range WA 300

Track applications: N, NA and NH

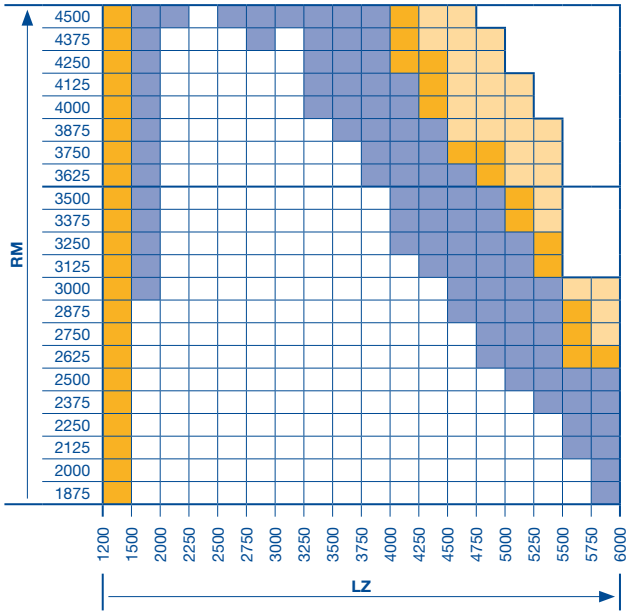

Track applications: ND and GD

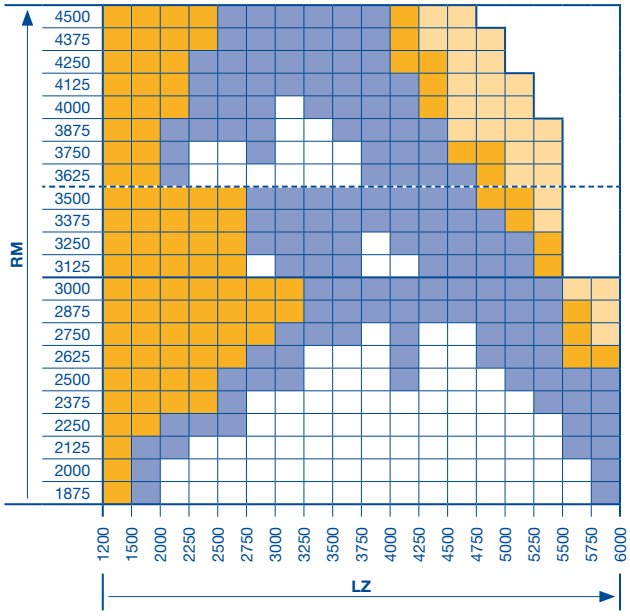

Track application: H, HA, HG, HU and RG

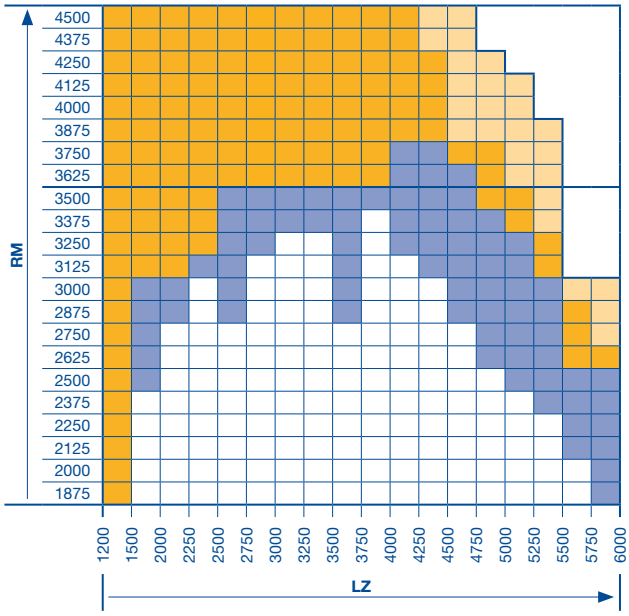

Track application: HD and RD

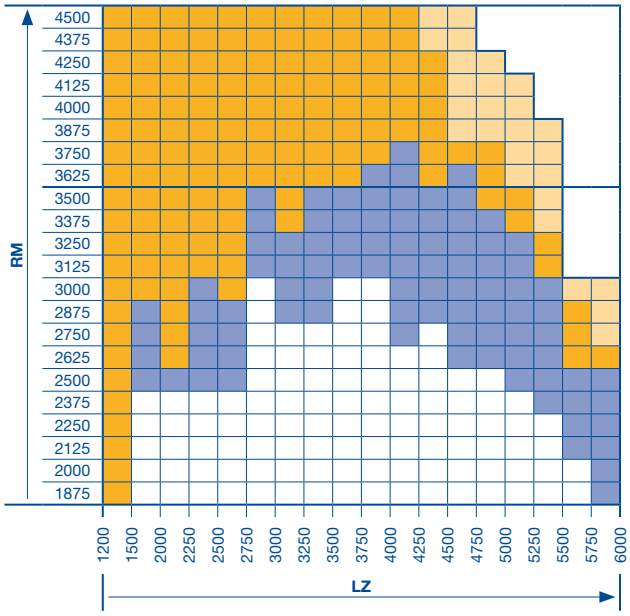

All door types available in any version.

Door types APU 67 Thermo and ALR 67 Thermo on request.

Only door type SPU 67 Thermo on request.
Door type APU 67 Thermo and ALR 67 Thermo not possible.

All door types and versions on request.

Notice:
Track application NS on request!

LZ Clear frame dimension
RM Grid height

Dimensions in mm

Shaft operator WA 300

Size range WA 300

Track application: V and VA

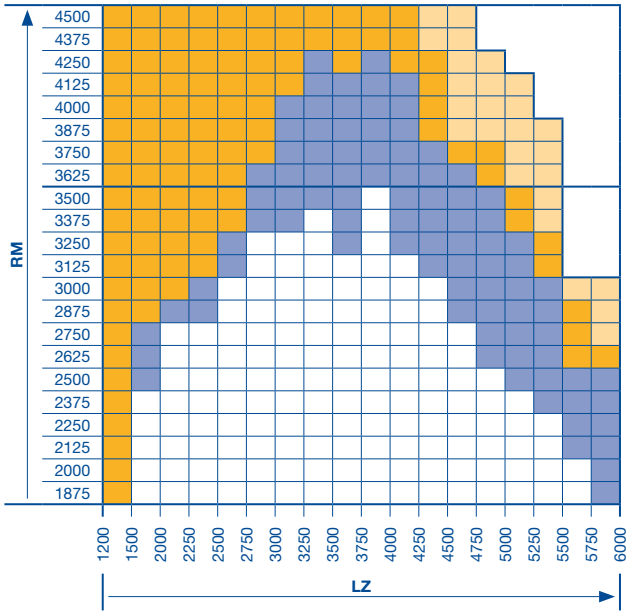

Track application: VU and WG

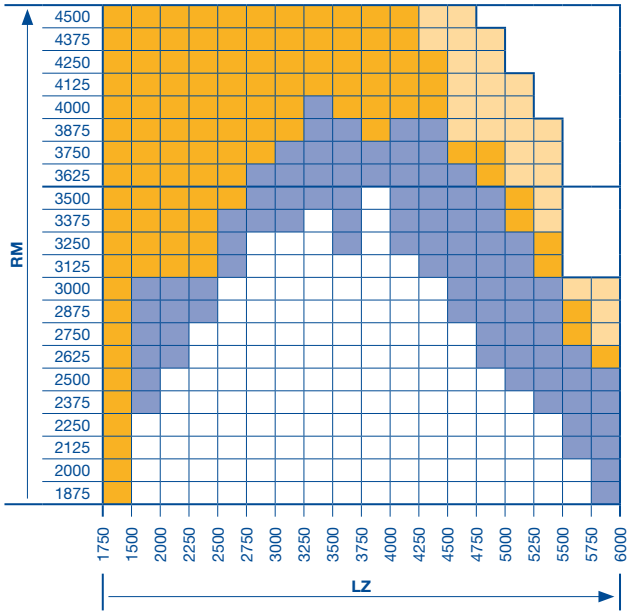

All door types available in any version.

Door types APU 67 Thermo and ALR 67 Thermo on request.

Only door type SPU 67 Thermo on request.
Door type APU 67 Thermo and ALR 67 Thermo not possible.

All door types and versions on request.

LZ Clear frame dimension
RM Grid height

Dimensions in mm

Shaft operator WA 400

As a frame-mounted operator

Shaft operator WA 400 for all track applications, except L, LD, HU, RD, RS, RK, VU and WS

As shown in the figure, the operator can be fitted either left or right, viewed from the inside.

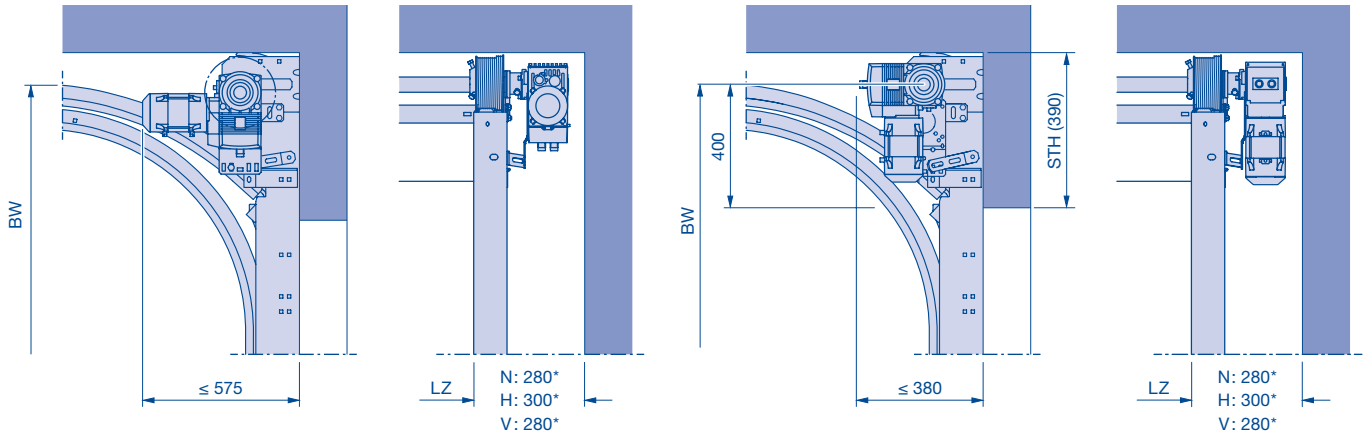

*** Notice:**
Dimension 75 mm if using a non-jointed emergency crank handle

Shaft operator WA 400 for track applications HU, RD, RS, RK, VU and WS

As shown in the figure, the operator can be fitted either left or right, viewed from the inside.

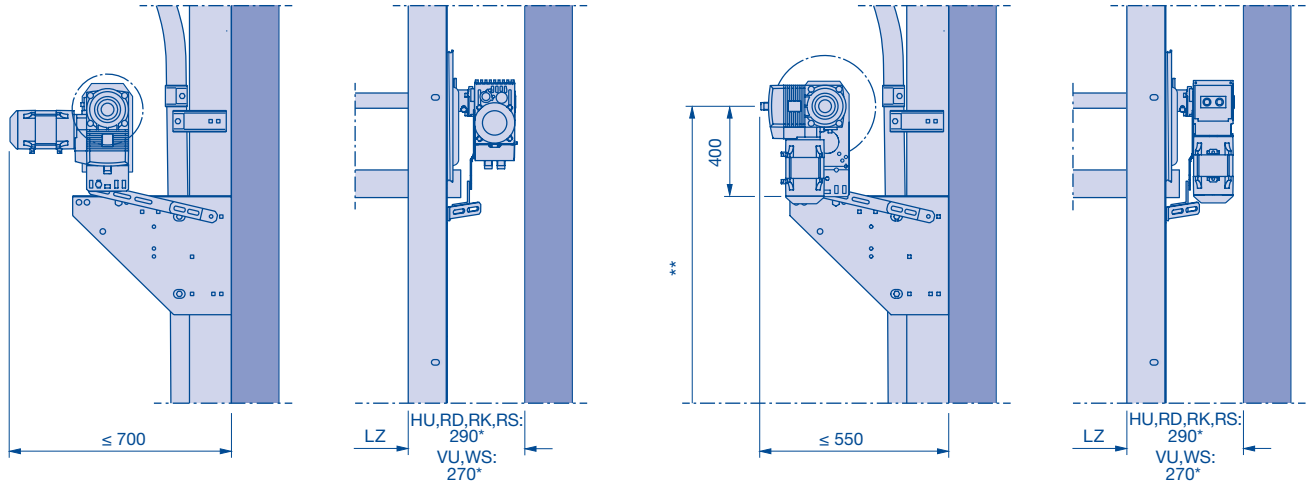

*** Notice:**
Dimension 75 mm if using a non-jointed emergency crank handle

** On request

BW Position of shaft support
LZ Clear frame dimension

Shaft operator WA 400

with chain box

Shaft operator WA 400 for all track applications, except L, LD, HU, RD, RS, RK, VU and WS

As shown in the figure, the operator can be fitted either left or right, viewed from the inside. **In fitting example 5: on the side opposite the door lock.**

Fitting example ⑤ right

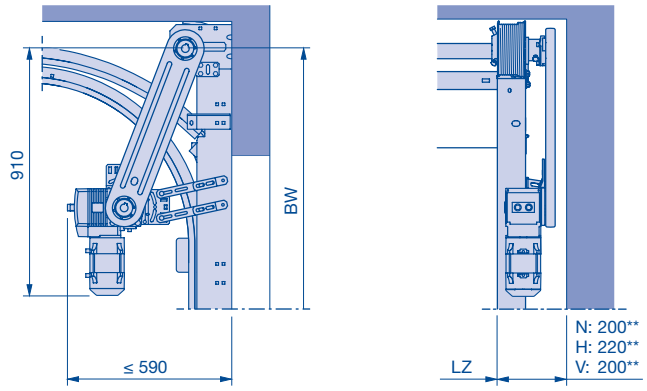

Fitting example ⑥ right

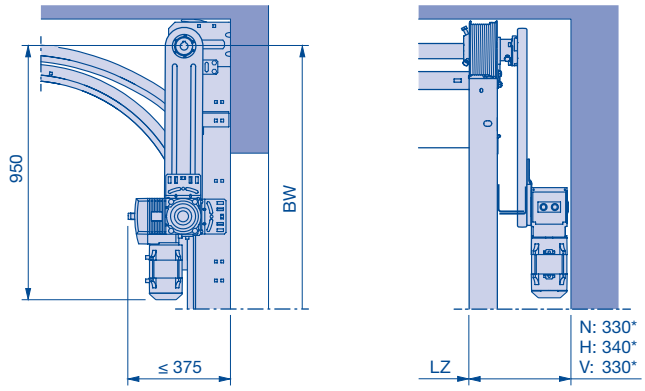

Shaft operator WA 400 for track applications L and LD

As shown in the figure, the operator can be fitted either left or right, viewed from the inside. **In fitting example 5: on the side opposite the door lock.**

Fitting example ⑤ right

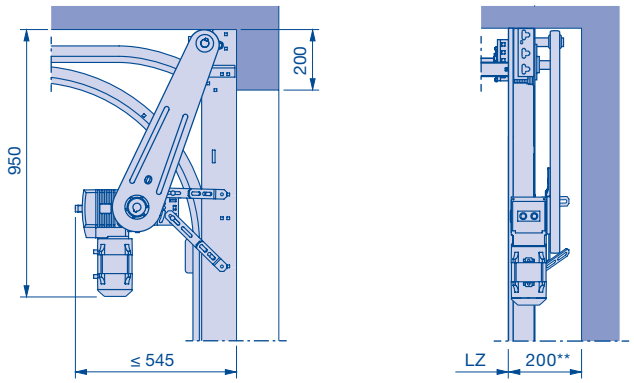

Fitting example ⑥ right

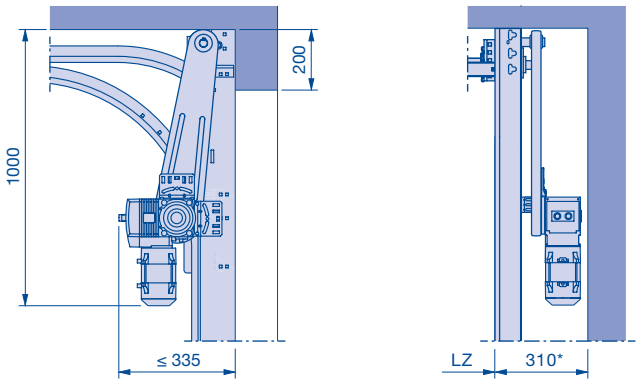

Shaft operator WA 400 for track applications HU, RD, RS, RK, VU and WS

As shown in the figure, the operator can be fitted either left or right, viewed from the inside. **In fitting example 5: on the side opposite the door lock.**

Fitting example ⑤ right

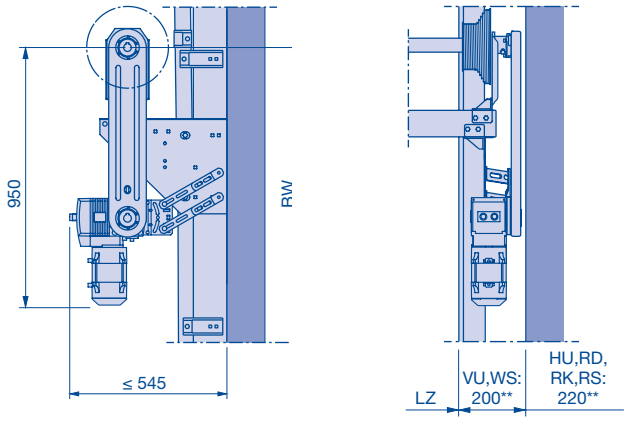

Fitting example ⑥ right

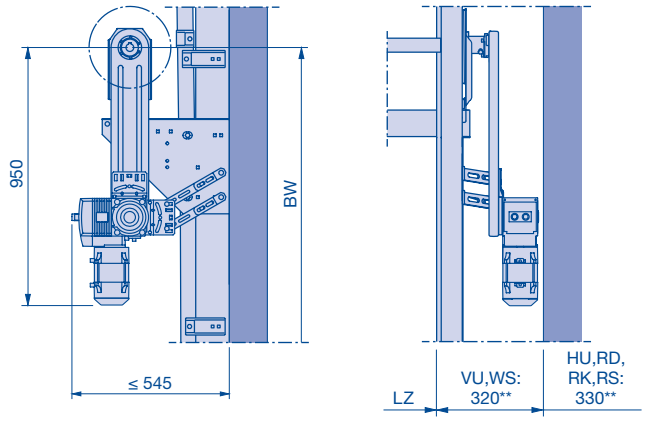

*** Notice:**
Dimension 75 mm if using a non-jointed emergency crank handle

**** Note:**
Dimension 40 mm if using a non-jointed emergency crank handle

BW Position of shaft support
LZ Clear frame dimension

Shaft operator WA 500 FU

As a frame-mounted operator

Shaft operator WA 500 FU for all track applications, except L, LD, HU, RD, RS, RK, VU and WS

As shown in the figure, the operator can be fitted either left or right, viewed from the inside.

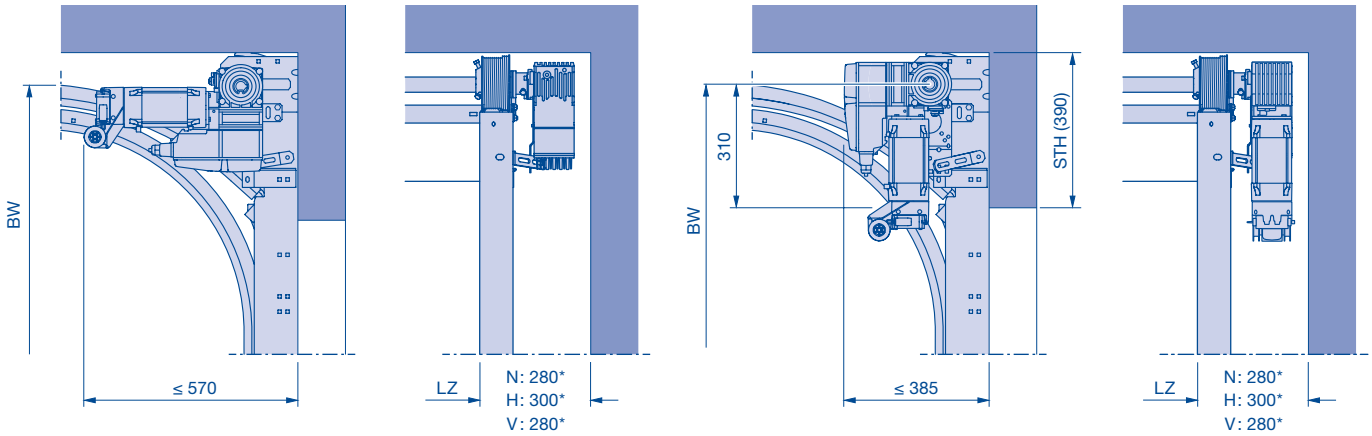

*** Notice:**
Dimension 75 mm if using a non-jointed emergency crank handle

Shaft operator WA 500 FU for track applications HU, RD, RS, RK, VU and WS

As shown in the figure, the operator can be fitted either left or right, viewed from the inside.

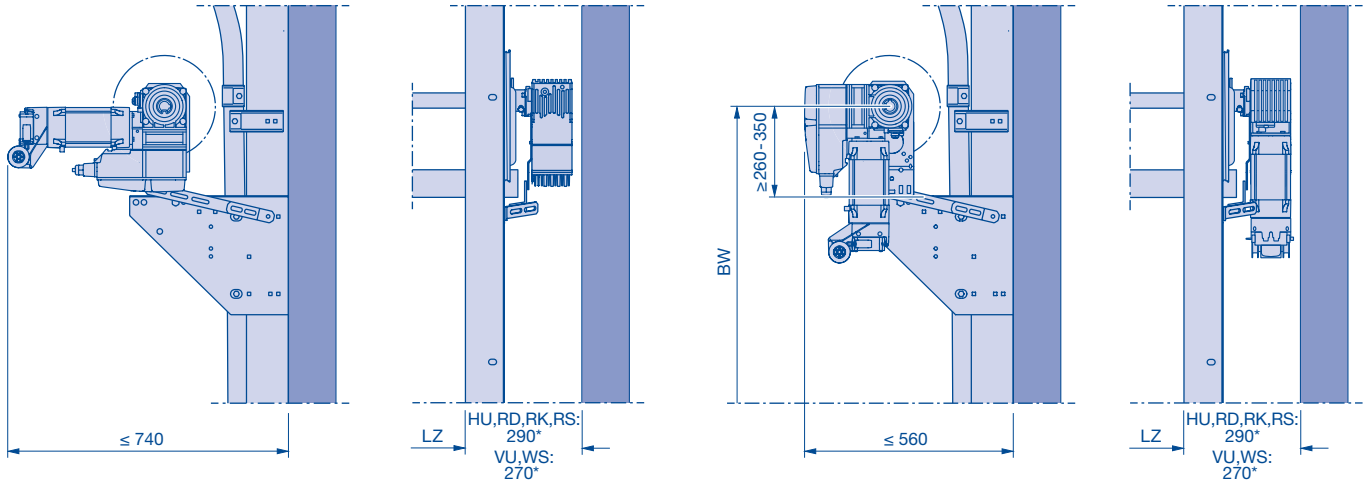

*** Notice:**
Dimension 75 mm if using a non-jointed emergency crank handle

** On request

BW Position of shaft support
LZ Clear frame dimension

Shaft operator WA 500 FU

with chain box

Shaft operator WA 500 FU for all track applications, except L, LD, HU, RD, RS, RK, VU and WS

As shown in the figure, the operator can be fitted either left or right, viewed from the inside. **In fitting example 5: on the side opposite the door lock.**

Fitting example ⑤ right

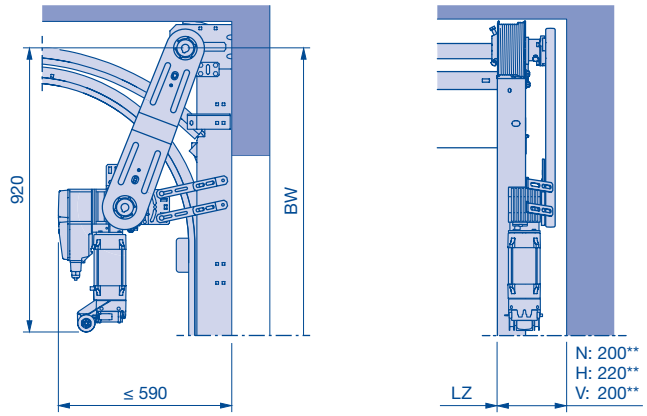

Fitting example ⑥ right

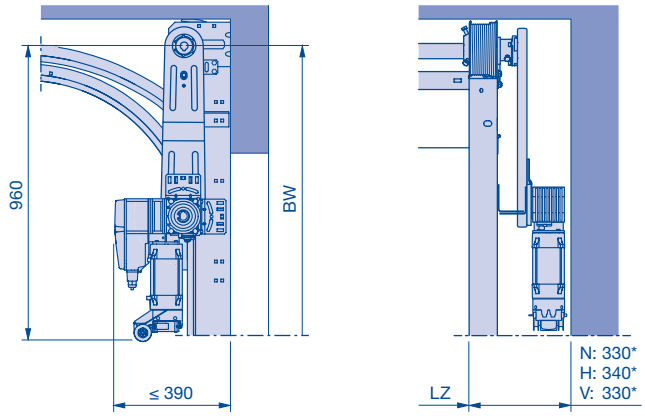

Shaft operator WA 500 FU for the track applications L and LD

As shown in the figure, the operator can be fitted either left or right, viewed from the inside. **In fitting example 5: on the side opposite the door lock.**

Fitting example ⑤ right

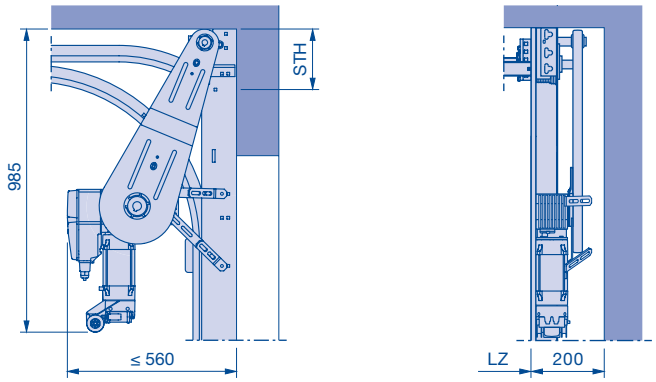

Fitting example ⑥ right

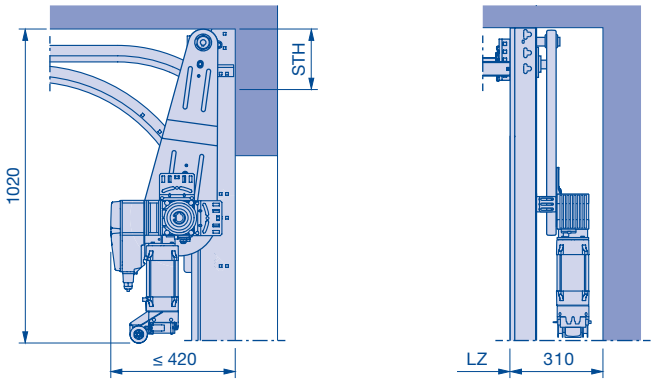

Shaft operator WA 500 FU for track applications HU, RD, RS, RK, VU and WS

As shown in the figure, the operator can be fitted either left or right, viewed from the inside. **In fitting example 5: on the side opposite the door lock.**

Fitting example ⑤ right

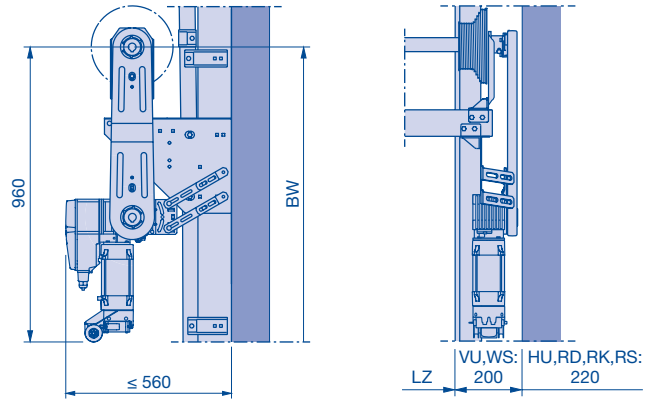

Fitting example ⑥ right

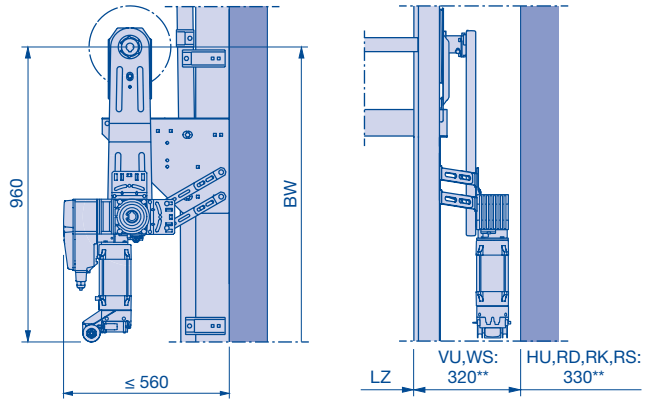

*** Notice:**
Dimension 75 mm if using a non-jointed emergency crank handle

**** Note:**
Dimension 40 mm if using a non-jointed emergency crank handle

BW Position of shaft support
LZ Clear frame dimension

Shaft operator WA 400 / 500 FU

for central mounting

Shaft operator WA 400 / 500 FU for track applications: N and ND

WA 400

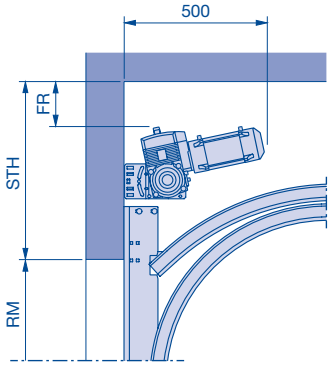

Track application	WA 400		WA 500 FU	
	STH min.	FR min.	STH min.	FR min.
N 1	590	45	625	45
N 2	620	50	650	45
N 3	–	–	710	45
ND 1	590	65	585	48
ND 2	620	75	605	48
ND 3	–	–	710	48
ND 6	630	65	595	48
ND 7	710	75	675	48

WA 500 FU

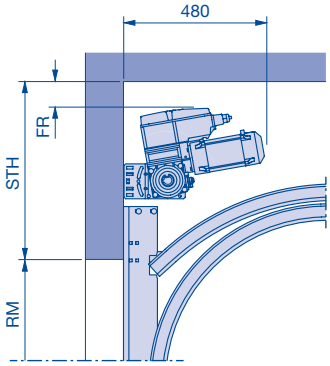

Shaft operator WA 400 / 500 FU for track application: NH and GD

WA 400

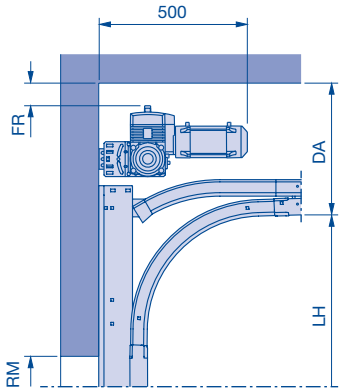

Track application	WA 400		WA 500 FU	
	DA min.	Min. FR	DA min.	Min. FR
NH 1 / GD 1	415	50	480	45
NH 2 / GD 2	440	50	485	45
NH 3	–	–	565	45

WA 500 FU

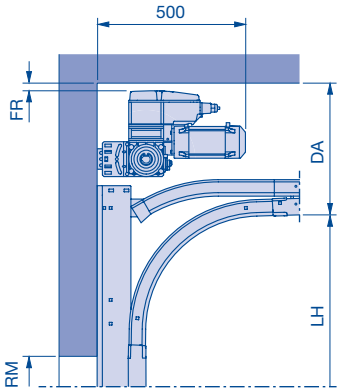

Shaft operator WA 400 / 500 FU for track applications: NS, NK, GS and GK

WA 400

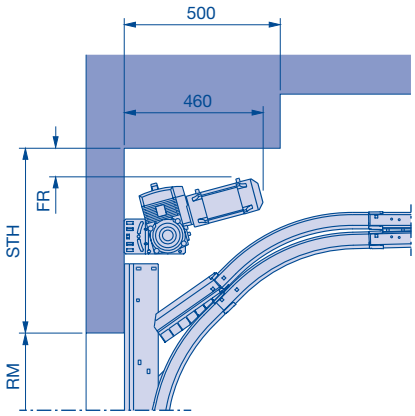

Track application	WA 400		WA 500 FU	
	STH min.	FR min.	STH min.	FR min.
NS 1 / NK 1	640	20	650	45
NS 2 / NK 2	670	25	675	45
GS / GK	On request			

WA 500 FU

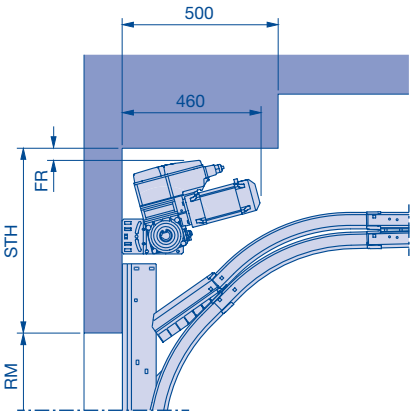

Notice:
Centre motor in conjunction with double spring shaft on request!

DA Distance to ceiling
FR Clearance ceiling / shaft operator
LH Track height
RM Grid height
STH Headroom

Shaft operator WA 400 / 500 FU

for central mounting

Shaft operator WA 400 / 500 FU for track applications: H, HD, HS and HK

WA 400

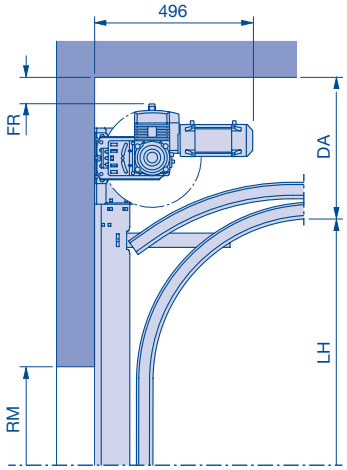

WA 500 FU

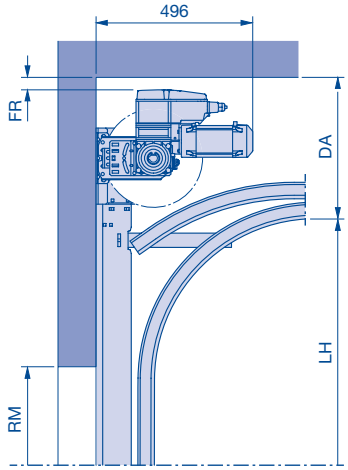

Track application	WA 400		WA 500 FU	
	DA min.	Min. FR	DA min.	Min. FR
H 4	500	55	540	45
H 5	500	55	540	45
H 8	–	–	565	45
HD / HS / HK	On request			

Shaft operator WA 400 / 500 FU for track applications: HU, RD, RS and RK

WA 400

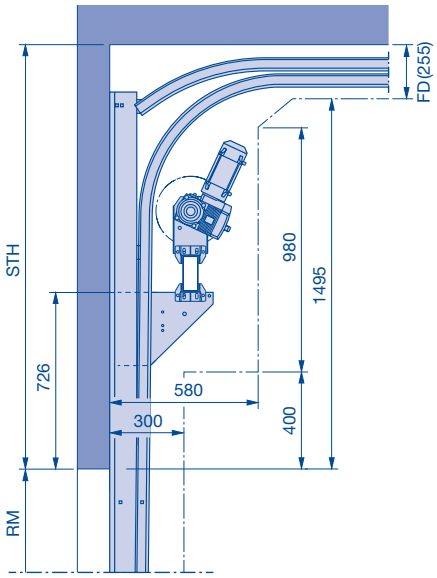

WA 500 FU

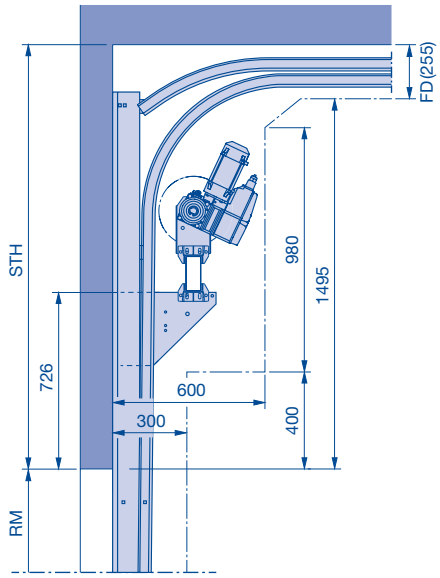

Track application	WA 400	WA 500 FU
RS / RK	On request	

Notice:
Centre motor in conjunction with double spring shaft on request!

DA	Distance to ceiling	**LH**	Track height
FR	Clearance ceiling / shaft operator	**RM**	Grid height

Shaft operator WA 400 / 500 FU

for central mounting

Shaft operator WA 400 / 500 FU for track applications: V and VS

WA 400

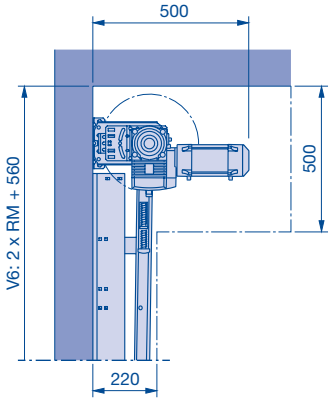

WA 500 FU

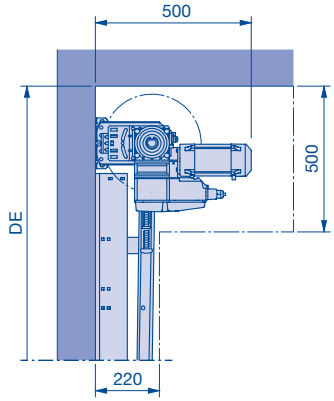

Track application	WA 400	WA 500 FU
VS	On request	

Shaft operator WA 400 / 500 FU for track applications: VU and WS

WA 400

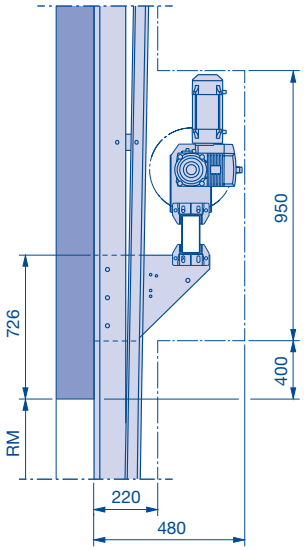

WA 500 FU

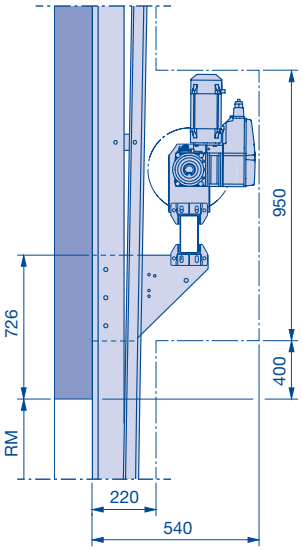

Notice:
Centre motor in conjunction with double spring shaft on request!

DA Distance to ceiling
LH Track height
RM Grid height

Chain drive operator ITO 400 / 500 FU

ITO 400 / 500 FU track applications N and ND (doors with wicket door on request)

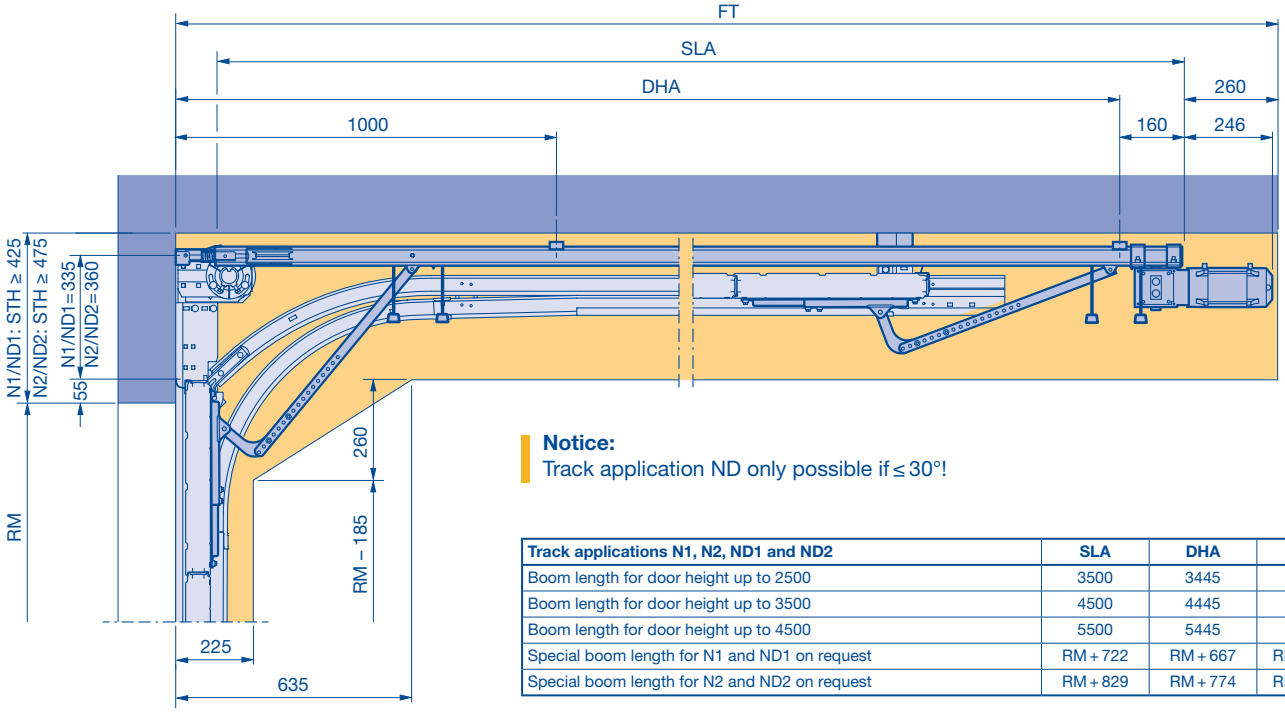

Notice:
Track application ND only possible if ≤ 30°!

Track applications N1, N2, ND1 and ND2	SLA	DHA	FT
Boom length for door height up to 2500	3500	3445	3865
Boom length for door height up to 3500	4500	4445	4865
Boom length for door height up to 4500	5500	5445	5865
Special boom length for N1 and ND1 on request	RM + 722	RM + 667	RM + 1087
Special boom length for N2 and ND2 on request	RM + 829	RM + 774	RM + 1194

ITO 400 / 500 FU track applications L and LD (doors with wicket door on request)

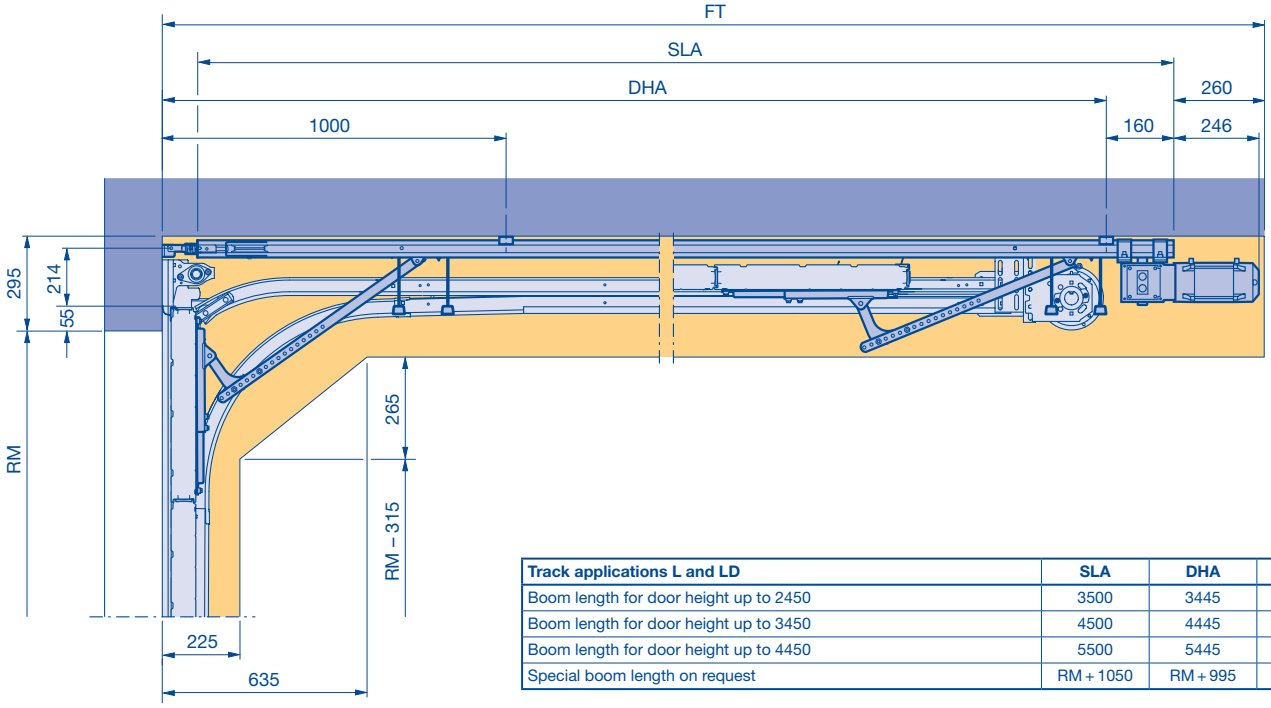

Track applications L and LD	SLA	DHA	FT
Boom length for door height up to 2450	3500	3445	3865
Boom length for door height up to 3450	4500	4445	4865
Boom length for door height up to 4450	5500	5445	5865
Special boom length on request	RM + 1050	RM + 995	RM + 1415

DHA Operator rear ceiling anchor
FT Clearance for door operator
RM Grid height
SLA Operator boom length
STH Headroom

Door leaf speeds
WA 300 / WA 400

(ATTENTION! The stated speeds can **only be achieved under optimum conditions** regarding door size and track size. More detailed information on request, as it is dependent on fitting, door and track heights.)

Fitting area	WA 300 S4		WA 400							
	Integrated / external control 360		Control 445 and 460							
	Optosensors-LE, 8k2 resistor strip VL1-LE, VL2-LE, HLG	Power limit	Flange operator / centre motor				Chain box operator			
			A / B control with optosensors and 8k2 resistor strip		A / B control VL 1-LE, VL 2-LE, HLG		A / B control with optosensors and 8k2 resistor strip		A / B control VL 1-LE, VL 2-LE, HLG	
	Max. speed in mm/s, Open / Close	Max. speed in mm/s, close [3]	rpm [1]	Max. speed in mm/s, Open / Close	rpm [1]	Max. speed in mm/s, Open / Close	rpm [1]	Max. speed in mm/s, Open / Close	rpm [1]	Max. speed in mm/s, Open / Close
N1, NA1, NS1, ND1 ≤ 30°, NK1	190	95	30	190	30	190	30	190	30	190
GD1, GK1, GS1, NH1	190	95								
ND6 > 30°	160 / 190 [1]	80 / 95 [1]	16	170 [1]	24	300 [1]	16	170 [1]	24	300 [1]
N2, NA2, NS2, ND2 ≤ 30°, NK2	210	105	24	210	30	265	24	210	30	265
GD2, GK2, GS2, NH2	210	105								
ND7 > 30°	190 [1]	95 [1]	19 [2]	275 [1, 2]	19	275 [1]	13	180 [1]	19	275 [1]
N3, NH3, ND3 < 6°	–		–				–			
ND3 ≥ 6°							13	160	19	190
L1, LD1	210	105	–				24	150	24	150
L2, LD2										
H4, HA4, HK4, HS4, HU4, HD4, RD4, RK4, RS4	160 / 190 [1]	80 / 95 [1]	19 / 16	170 [1]	30 / 24	290 [1]	19 / 16	170 [1]	30 / 24	290 [1]
H5, HA5, HU5, HD5, RD5	210 [1]	105 [1]	24 / 19 [2]	290 [1, 2]	24 / 19		16 / 13		24 / 19	
H8, HD8, HK8, HS8, HU8	–		–				16 [2]	250 [2]	16	250
V6, VA6, VU6, VS6, WG6, WS6	160 / 190 [1]	80 / 95 [1]	16	170 [1]	24	300 [1]	16	170 [1]	24	300 [1]
V7, VU7, VS7, WG7, WS7	190 [1]	95 [1]	19 [2]	275 [1, 2]	19	275 [1]	13		19	275 [1]
V9, VU9, VS9, WS9	–		–				16 [2]	250 [2]	16	250

[1] Max. door leaf speed depending on the high-lift / door height (RM) / door width (LZ)
[2] Only possible with press-and-hold operation
[3] From 2500 mm above FFL to FFL without closing edge safety device to comply with EN 13241

Notice
Double spring shaft only possible in conjunction with WA 500 FU!

Door leaf speeds
WA 500 FU

(ATTENTION! The stated speeds can **only be achieved under optimum conditions** regarding door size and track size. More detailed information on request, as it is dependent on fitting, door and track heights.)

Fitting area	WA 500 FU											
	Control 545						Control 560					
	Flange operator / centre motor	Chain box operator	Max. speed in mm/s				Flange operator / centre motor	Chain box operator	Max. speed in mm/s			
			In "Open" direction	Optosensors-LE, 8k2 resistor strip	VL1-LE, VL2-LE	HLG			In "Open" direction TopSpeed: 0 **TopSpeed: 1**	Optosensors-LE, 8k2 resistor strip	VL1-LE, VL2-LE	HLG
				In "Close" direction	In "Close" direction	In "Close" direction				In "Close" direction	In "Close" direction	In "Close" direction
N1, NA1, NS1, ND1 ≤ 30°, NK1	Yes	Yes	350	200	250		Yes	Yes	500 **575 [5]**	200	300	500
							–	**Yes [4]**	**700 [5]**			
GD1, GK1, GS1, NH1							Yes	Yes	500			
ND6 > 30°							Yes	Yes	500			
							–	**Yes [4]**	**700 [5]**			
N2, NA2, NS2, ND2 ≤ 30°, NK2			500	500			Yes	Yes	500 **825 [5]**	500	500	500 825
							–	**Yes [4]**	**1000 [5]**			1000
GD2, GK2, GS2, NH2				200	300	500	Yes	Yes	500	200	300	500
ND7 > 30°				500			Yes	Yes	500 **825 [5]**	500	500	500 825
							–	**Yes [4]**	**1000 [5]**			1000
N3, ND3							Yes	Yes	**1000 [5]**			500 1000
NH3				200	300	500	Yes	Yes	500	200	300	500
L1, LD1	–	Yes	500	200	250		–	Yes	**575 [5]**	200	300	375 500
								Yes [4]	**1000 [5]**	200	300	500
L2, LD2				500			–	Yes	**575 [5]**	200	300	375 500
								Yes [4]	**1000 [5]**	500	500	1000
H4, HA4, HK4, HS4, HU4, HD4, RD4, RK4, RS4	Yes	Yes	350	200	250		Yes	Yes	500 **700 [5]**	200	300	500
H5, HA5, HU5, HD5, RD5			500	500			Yes	Yes	500 **825 [5]**	500	500	500 825
							–	**Yes [4]**	**1000 [5]**			1000
H8, HD8, HK8, HS8, HU8							Yes	Yes	500 **1000 [5]**			500 1000
V6, VA6, VU6, VS6, WS6	Yes	Yes	350	200	250		Yes	Yes	500 **700 [5]**	200	300	500
V7, VU7, VS7, WS7			500	500			Yes	Yes	500 **825 [5]**	500	500	500 825
							–	**Yes [4]**	**1000 [5]**			1000
V9, VU9, VS9, WS9							Yes	Yes	500 **1000 [5]**			500 1000

[4] Increased door travel speed up to 1 m/s required

[5] Max. door leaf speed with door width (LZ) ≤ 6000 mm;
For door width (LZ) > 6000 mm only after technical inspection; not possible with roller holder type S

Max. door leaf speed from the open end-of-travel position in the close direction up to approx. 3200 mm above FFL

Max. door leaf speed from the open end-of-travel position in the close direction up to approx. 500 mm above FFL

Notice
Double spring shaft only possible in conjunction with control WA 500 FU!

Track application: H with direct drive operator S75 / S140

High-lift track application

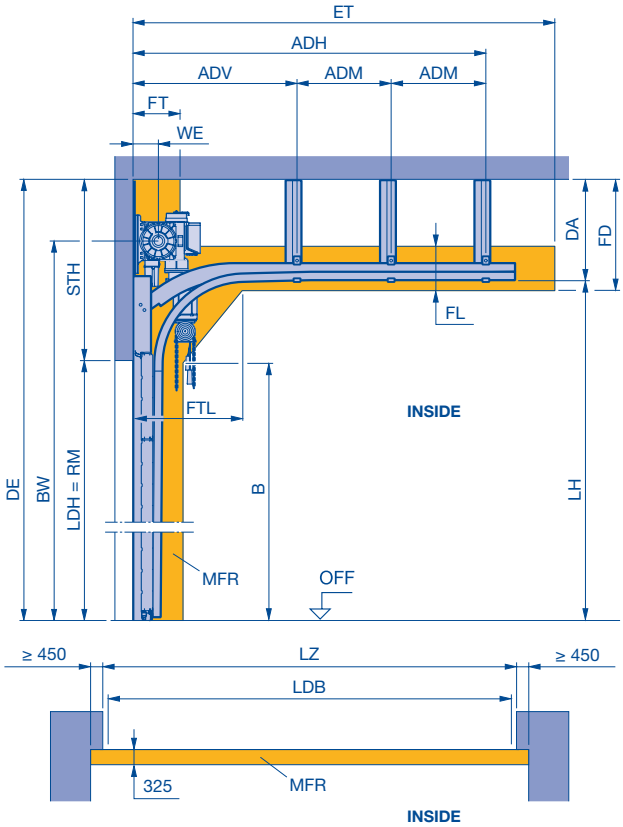

ADH Distance to rear ceiling anchor
ADM Distance to central ceiling anchor
ADV Distance to front ceiling anchor
B Start of double radius
BW Position of shaft support
DA Min. distance to ceiling
DE Min. ceiling height
ET Min. distance back
FD Min. ceiling clearance
FL Track clearance
FT Clearance for door operation
FTL Clearance door section in the double radius
LDB Clear passage width with ThermoFrame (see page 62)
LDH Clear passage height
LH Track height
LZ Clear frame dimension
MFR Space for fitting the door
OFF Finished floor level (FFL)
RM Grid height
STH Min. headroom
WE Shaft centre from lintel

Notices:

- The clearance required for fitting the door must be free of supply lines, heater fans, etc.
- The direct drive operator is generally available on request.

Door weights for roof loads:

SPU 67 Thermo = 450 N/m²
APU 67 Thermo / ALR 67 Thermo = 500 N/m²
ALR 67 Thermo Glazing = 600 N/m²

- Other versions on request
- Observe the min. sideroom, see page 62

	STH	WE	DA	B	BW
H 10, RM ≤ 6000	1125	145	625	LH - 513	LH + 240
H 11, RM > 6000		205			

DE	ET *	FD	FL	FT	FTL	LH
STH + RM	2 × RM – LH + 962	DA + 65	275	2 × WE	675	Min. RM + 500 Max. 10250

* Simplified calculation

Ceiling anchors

Track suspensions for track application H with direct drive operator

Track suspensions as ceiling anchors in five lengths, standard length 1040 mm.
DH = rear ceiling anchor (see page 84), door weights for roof loads (see page 84).

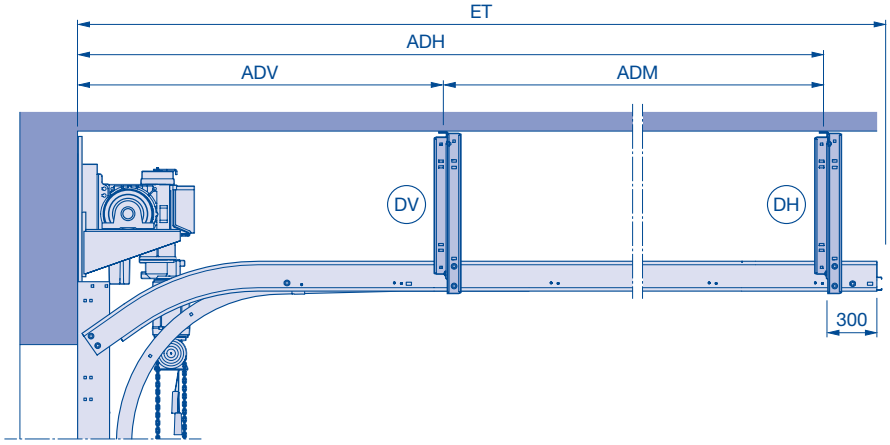

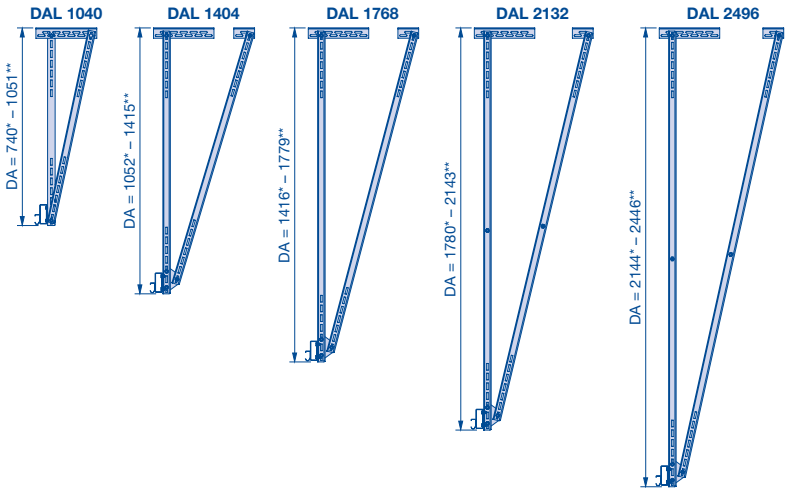

* min.
** Max.

Suspension with C-rail for track application H with direct drive operator

Track application	LZ	ET	Number of suspensions per side	DV	DM	DH	ADV (max. 3000)	ADM	ADH
H10, H11	≤ 6000	≤ 2142	1	0	0	1	–	–	ET – 300
		2143 – 5732	2	1	0	1	ADH / 2		
		> 5733	3	1	1	1	ADH / 3	(ET – ADV – 300) / 2	
	> 6000	≤ 1907	1	0	0	1	–	–	
		1908 – 3492	2	1	0	1	ADH / 2		
		3493 – 5492	3	1	1	1	ADH / 3	(ET – ADV – 300) / 2	
		> 5493	4	1	2	1	ADH / 4	(ET – ADV – 300) / 3	

*** Dimensions can be found in the product configurator.

DH Rear ceiling anchor
DM Central ceiling anchor
DV Front ceiling anchor
LZ Clear frame dimension

DAL Ceiling anchor length
ADH Distance to rear ceiling anchor
ADM Distance to central ceiling anchor
ADV Distance to front ceiling anchor

Direct drive operators S75 and S140

Direct drive operators S75 and S140 for track application H

RM ≤ 6000

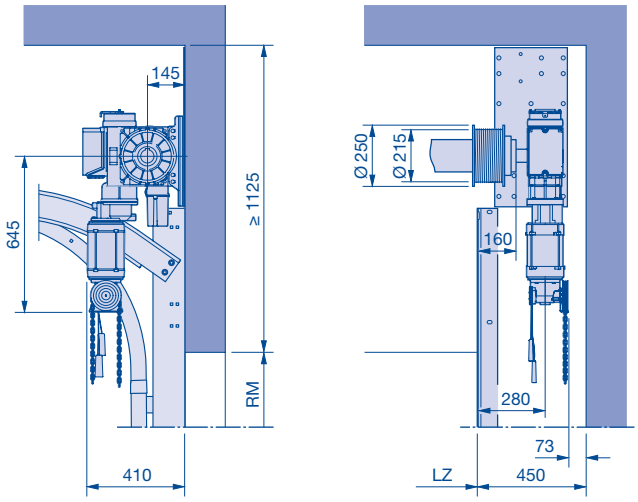

RM > 6000

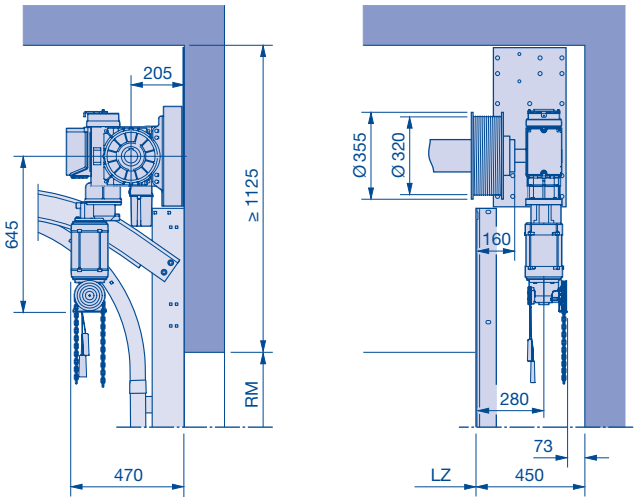

Door leaf speeds – Control 445 R and 460 R

Direct drive operator	Cable drum diameter in mm	Max. speed in mm/s – Open / Close
S75	215	110
S75	320	170
S140	215	80
S140	320	120

LZ Clear frame dimension
RM Grid height

Infill overview
Determination of the roof slope

Infill overview	SPU 67 Thermo	APU 67 Thermo	ALR 67 Thermo	ALR 67 Thermo Glazing
Infill type	**Abbreviation**			
PU infill, 51 mm with Stucco-textured aluminium sheet cover on both sides, $U_g = 0.54\ W/m^2 \cdot K$	–	FU	FU	–
PU infill, 51 mm with smooth, anodised aluminium sheet cover on both sides, $U_g = 0.54\ W/m^2 \cdot K$	–	XU	XU	–
PU infill, 26 mm with smooth, anodised aluminium sheet cover on both sides, $U_g = 1.2\ W/m^2 \cdot K$ [3]	TU	TU	TU	–
Clear polycarbonate triple pane, 51 mm, $U_g = 2.7\ W/m^2 \cdot K$	C3	C3	C3	–
Clear polycarbonate quadruple pane, 51 mm, $U_g = 2.7\ W/m^2 \cdot K$	C4	C4	C4	–
Clear synthetic triple pane, 51 mm, $U_g = 1.6\ W/m^2 \cdot K$	S3	S3	S3	–
Synthetic triple pane, crystal structure, 51 mm, $U_g = 1.6\ W/m^2 \cdot K$	U3	U3	U3	–
Synthetic triple pane, grey tinted, 51 mm, $U_g = 1.6\ W/m^2 \cdot K$	A3	A3	A3	–
Synthetic triple pane, white tinted (opal), 51 mm, $U_g = 1.6\ W/m^2 \cdot K$	M3	M3	M3	–
Clear synthetic quadruple pane, 51 mm, $U_g = 1.3\ W/m^2 \cdot K$	S4	S4	S4	–
Synthetic quadruple pane, crystal structure, 51 mm, $U_g = 1.3\ W/m^2 \cdot K$	U4	U4	U4	–
Synthetic quadruple pane, grey tinted, 51 mm, $U_g = 1.3\ W/m^2 \cdot K$	A4	A4	A4	–
Synthetic quadruple pane, white tinted (opal), 51 mm, $U_g = 1.3\ W/m^2 \cdot K$	M4	M4	M4	–
Double pane made of single-pane safety glass, 26 mm, $U_g = 2.6\ W/m^2 \cdot K$ [1]	E2	E2	E2	E2
Double pane made of laminated safety glass P4A, 26 mm, $U_g = 1.3\ W/m^2 \cdot K$ [3]	W2	W2	W2	–
Climatic double pane made of single-pane safety glass, 26 mm, $U_g = 1.1\ W/m^2 \cdot K$ [1]	g2	g2	g2	g2
Prepared for on-site infill [2]	HS	HS	HS	–

[1] Only for door width up to 6000 mm on request
[2] On request; infill weight and thickness must be specified (anodised glazing beads required)
[3] Only NT80 Thermo with RC 2 version

Determining the roof slope in increments of two degrees (a°)

a°	%	X (mm)	a°	%	X (mm)	a°	%	X (mm)
2	3,49	34,9	16	28,67	286,7	30	57,74	577,4
4	6,99	69,9	18	32,49	324,9	32	62,49	624,9
6	10,51	105,1	20	36,40	364,0	34	67,46	674,6
8	14,05	140,5	22	40,40	404,0	36	72,66	726,6
10	17,63	176,3	24	44,52	445,2	38	78,13	781,3
12	21,26	212,6	26	48,77	487,7	40	83,91	839,1
14	24,93	249,3	28	53,17	531,7	42	90,05	900,5
						44	96,57	965,7
						46	103,55	1035,5

Overview
Profile cylinder

Product type	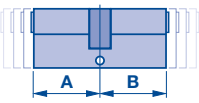 Double cylinder PC length (L): Interior (A) + exterior (B)	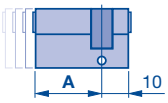 Half cylinder PC length (L): Closing side (A) + blind side	Glazing frame Infill	Door lock Standard	Door lock Recessed	Wicket door	Optional extras Bolt lock	Operator accessories Key switches
SPU 67 Thermo **APU 67 Thermo**	L = 35 + 55	–	–	–	–	●	●	–
	–	L = 55 + 10	–	–	●	●	●	–
	–	L = 95 + 10	–	●	–	–	–	–
	–	L = 30 + 10	–	–	–	–	–	●
ALR 67 Thermo	L = 35 + 55	–	–	–	–	●	●	–
	–	L = 55 + 10	–	–	–	●	–	–
	–	L = 80 + 10	FU and XU	●	–	–	–	–
	–	L = 30 + 10	–	–	–	–	–	●
NT 80	L = 35 + 70	L = 35 + 10	–	–	–	–	–	–
NT 80 RC2	L = 35 + 60*	–	–	–	–	–	–	–

* Profile cylinder in acc. with DIN 1303
(digit 7 = grade 5, digit 8 = grade 1)

Notes

Brand quality for residential and commercial construction

The family-owned company Hörmann offers all important construction components for building and renovating projects from a single source. We manufacture in highly-specialised factories using the latest production technologies. Furthermore, our employees work intensively on new products, continual further developments and improvements to details. The results are patents and one-of-a-kind products you can depend on.

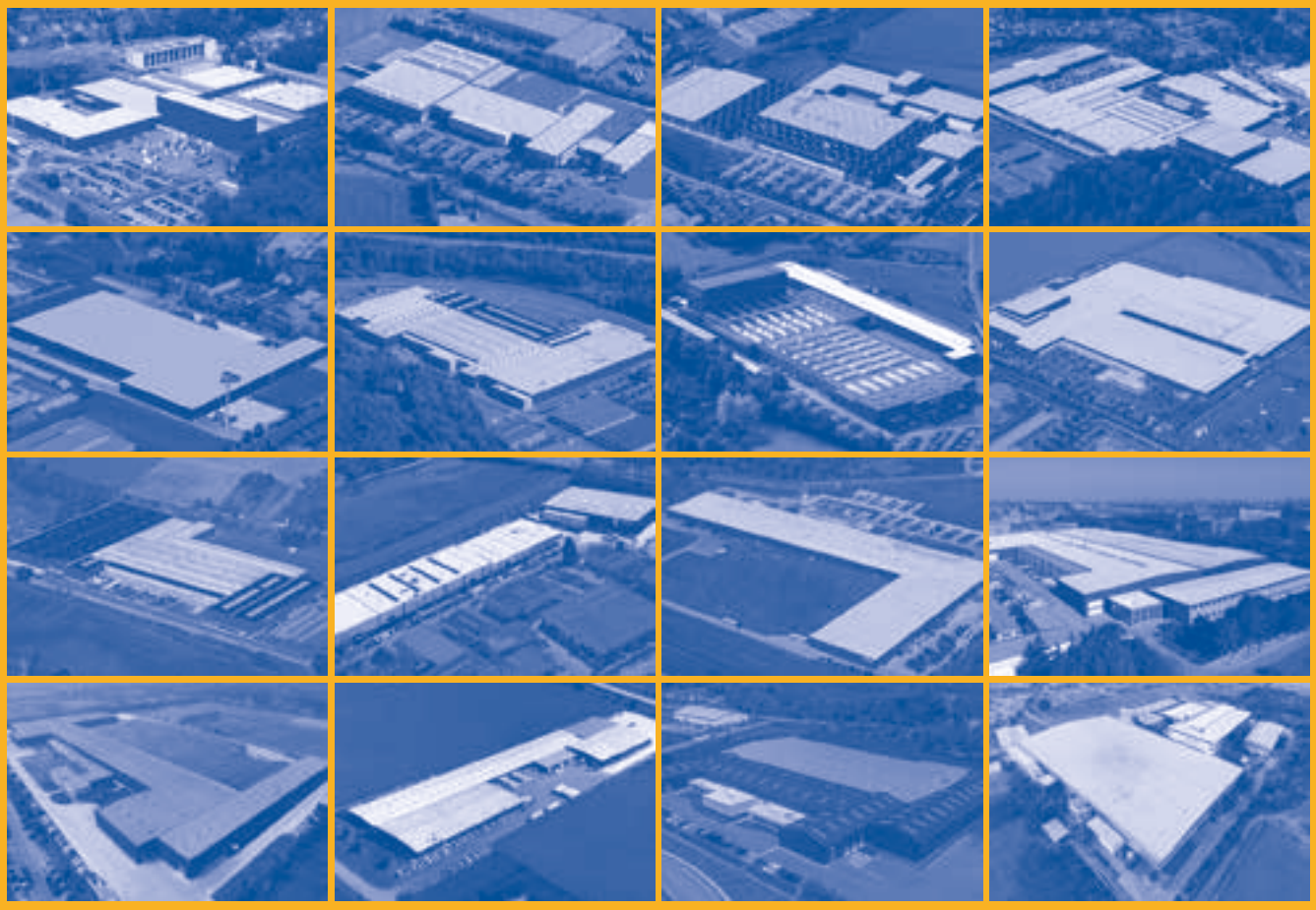

Issue: 08.2022 / 3097453 EN RE www.hoermann.com

HÖRMANN